PARTS MANUAL

RXV EX1

FLEET
FREEDOM
SHUTTLE 2+2

10015997-A

SERVICE PARTS MANUAL

EFI GOLF CAR

FLEET
FREEDOM
SHUTTLE 2+2

STARTING MODEL YEAR 2023

Never modify the vehicle in any way that will alter the weight distribution of the vehicle, decrease its stability or increase the speed beyond the factory specifications. Such modifications can cause serious personal injury or death. Textron Specialized Vehicles prohibits and dis-claims responsibility for any such modifications or any other alteration which would adversely affect the safety of the vehicle.

TSV reserves the right to incorporate engineering and design changes to products in this manual, without obligation to include these changes on units sold previously.

The information contained in this manual may be revised periodically by TSV, and therefore is subject to change without notice.

TSV DISCLAIMS LIABILITY FOR ERRORS IN THIS MANUAL, and SPECIFICALLY DISCLAIMS LIABILITY FOR INCIDENTAL AND CONSEQUENTIAL DAMAGES resulting from the use of the information and materials in this manual.

These are the original instructions as defined by 2006/42/EC.

TO CONTACT US:

Textron Specialized Vehicles, Inc.

1451 Marvin Griffin Road

Augusta, Georgia, USA 30906-3852

NORTH AMERICA:

Technical Assistance & Warranty PHONE: 1-800-774-3946, FAX: 1-800-448-8124

Service Parts PHONE: 1-888-438-3946, FAX: 1-800-752-6175

International: PHONE: 001-706-798-4311, FAX: 001-706-771-4609

To obtain a copy of the limited warranty applicable to the vehicle, call or write a local Distributor, authorized Branch or the Warranty Department with vehicle serial number and manufacturer code.

The use of non Original Equipment Manufacturer (OEM) approved parts may void the warranty.

Tampering with or adjusting the governor to permit vehicle to operate at above factory specifications will void the vehicle warranty.

When servicing engines, all adjustments and replacement components must be per original vehicle specifications in order to maintain the United States of America Federal and State emission certification applicable at the time of manufacture.

BATTERY PROLONGED STORAGE

All batteries will self discharge over time. The rate of self discharge varies depending on the ambient temperature and the age and condition of the batteries.

A fully charged battery will not freeze in winter temperatures unless the temperature falls below -75° F (-60° C).

BATTERY DISPOSAL

Lead-acid batteries are recyclable. Return whole scrap batteries to distributor, manufacturer or lead smelter for recycling. For neutralized spills, place residue in acid-resistant containers with absorbent material, sand or earth and dispose of in accordance with local, state and federal regulations for acid and lead compounds. Contact local and/or state environmental officials regarding disposal information.

TABLE OF CONTENTS

SECTION	Page No.
HOW TO USE THE SERVICE PARTS MANUAL	V
ACCELERATOR	A - 1
AIR FILTER	B - 1
BODY	C - 1
BRAKES	D - 1
DIRECTION SELECTOR	E - 1
ELECTRICAL	F - 1
ENGINE AND MUFFLER	G - 1
FRAME	H - 1
FRONT SUSPENSION AND STEERING	J - 1
FUEL SYSTEM	K - 1
REAR AXLE	L - 1
REAR SUSPENSION	M - 1
SEATING	N - 1
TOWBAR	P - 1
WEATHER PROTECTION	Q - 1
WHEELS AND TIRES	R - 1
DECALS AND LABELS	T - 1

NOTES

HOW TO USE THE SERVICE PARTS MANUAL

This manual is divided into several sections:

- GENERAL INFORMATION
- ILLUSTRATED PARTS BREAKDOWN

The first section, GENERAL INFORMATION, contains the following information:

- WARRANTY INFORMATION
- TABLE OF CONTENT
- HOW TO USE THE SERVICE PARTS MANUAL

The second section, ILLUSTRATED PARTS BREAKDOWN, contains illustrations and parts lists for all systems of your vehicle.

USE OF THE MANUAL

To use this manual, consult the TABLE OF CONTENTS to locate the information or illustration required.

Introduction of some revisions varies due to supply of components; therefore, it is possible that various combinations of components may be found that are not directly reflected by each illustration. Consult the illustration that best suits your situation and then contact the Service Parts Department. It is important that the serial number or VIN of your vehicle and the model name be supplied to Service Parts when ordering any replacement components.

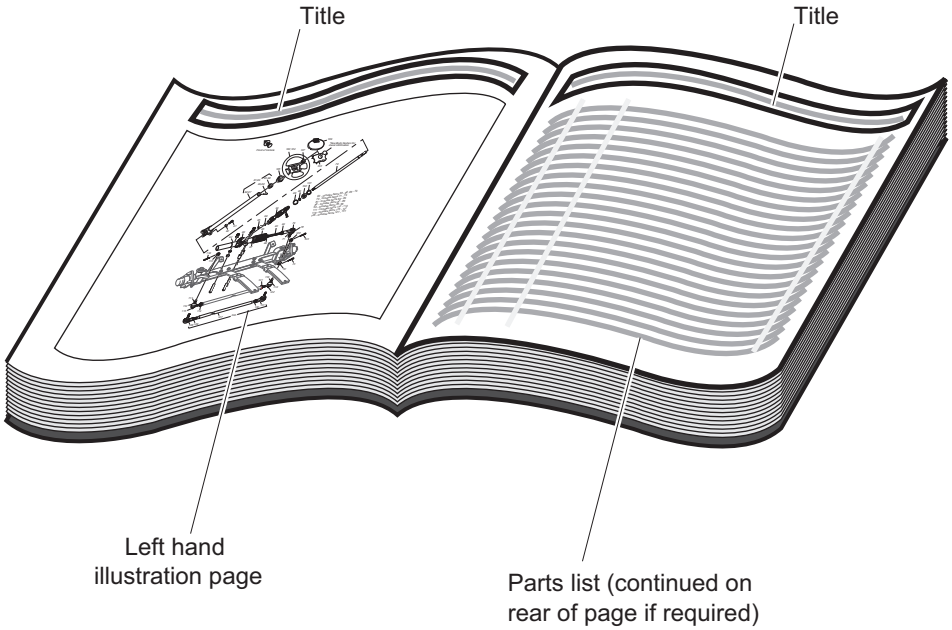

1. WHEN THE PART NUMBER IS NOT KNOWN

- Determine the function and application of the part required. Turn to the Table of Content and select the most appropriate title.
- Turn to the page number indicated and locate the desired part on the illustration.
- From the illustration, obtain the item number assigned to the desired part. Refer to the accompanying description for specific information regarding the part.

2. IF YOU KNOW THE PART NUMBER

- Locate the part number or description in the appropriate column on the parts list page.

NOTE: It is suggested that you confirm that the part selected is correct by verifying it with the pictorial representation on the illustrated page.

Should an asterisk (*) appear in the part number column on the parts list page, read upwards until a part number is found. The part number is the lowest assembly sold by Service Parts and the asterisk (*) indicates that the part depicted is not available for purchase.

NOTE: Descriptions are indented under the assembly that they are used on. That assembly is, in turn listed under the assembly that it is used on. This process is repeated until the highest final assembly is reached.

To facilitate the maintenance and repair of the vehicle, Service Manuals are available from the manufacturer.

3. COLOR CODE FOR BODY COMPONENTS

The last two digits of the part number for the body part will denote the color code, locate the part number for the cowl, rear body, seat pod, side panel or seat wrap then locate your color in the list below, replace the last ** or XX with the two digit color code.

CODE #	DESCRIPTION
11	BLACK
19	PATRIOT BLUE PEARL
20	INFERNO RED METALLIC
31	METALLIC CHARCOAL
36	IVORY
37	FOREST GREEN
38	BRIGHT WHITE
39	FLAME RED
41	ELECTRIC BLUE
42	PLATINUM
43	BURGUNDY
44	ALMOND
51	SUNBURST ORANGE
A5	OCEAN GRAY
A6	TRUMP PEARL WHITE
A7	SLATE GRAY

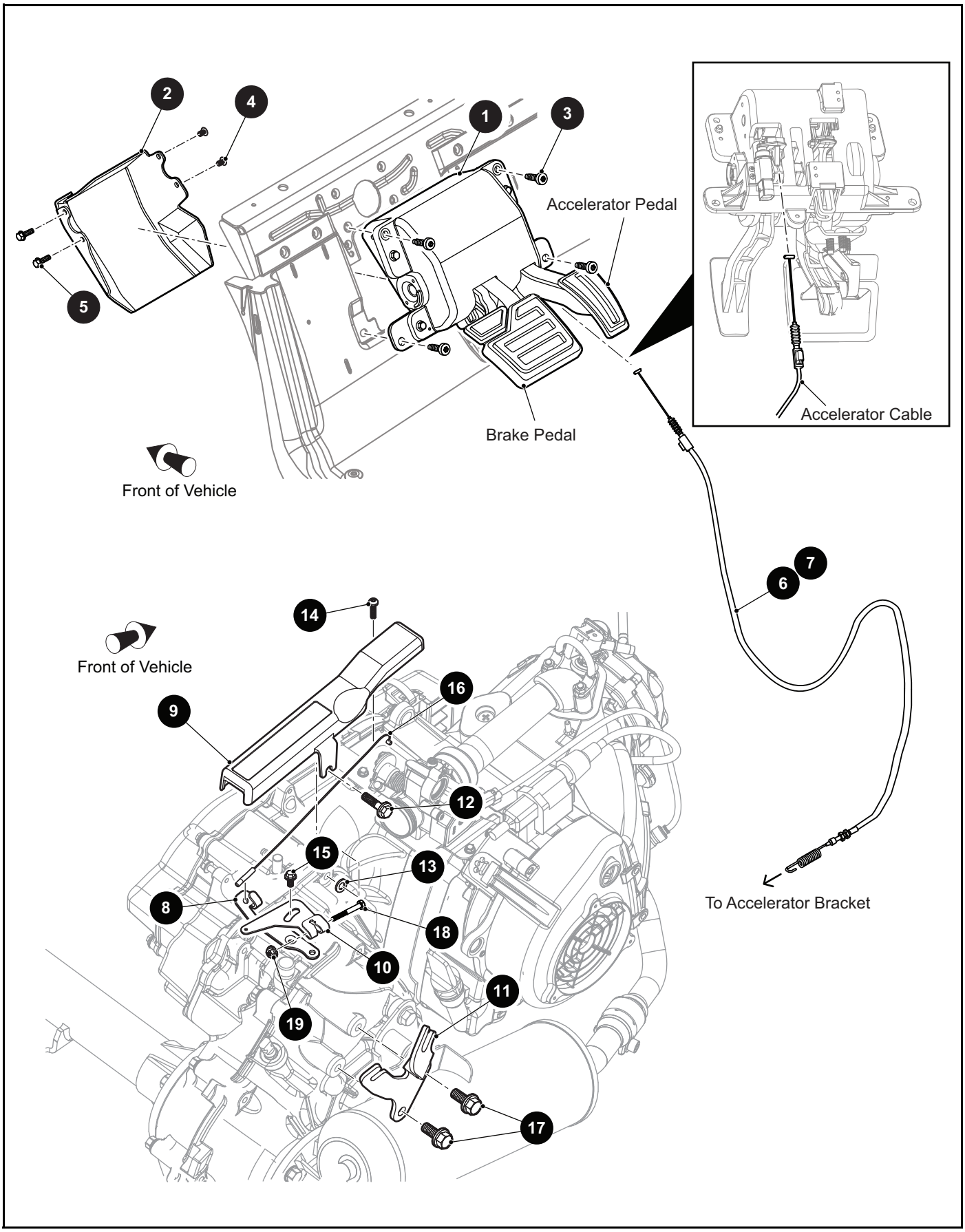
2
4
1
3
Accelerator Pedal
5
Accelerator Cable
Brake Pedal
Front of Vehicle
7
6
14
Front of Vehicle
16
9
12
15
13
8
18
10
11
19
17
To Accelerator Bracket

THE USE OF NON U.L. PARTS WILL VOID ANY U.L. LISTING.
When ordering parts, please specify the model and serial number of the product.
* Indicates a component that is not available as an individual part.
*** Indicates consult Customer Service Department for additional information.

ITEM	PART NO.	1 2 3 4 5 DESCRIPTION	QTY.
1	10002017	Hanging Pedals	1
2	10010054	Hanging Pedals Cover	1
3	10025814	Pan Head Taptite Bolt, M8 - 1.25 x 30mm Lg	4
4	16816G5	Ratchet Rivet, .187" x .550"	2
5	71102G01	Hex Head Washer Bolt, 1/4" - 20 x .3/4" Lg, Grade 5	2
6	10003561	Accelerator Cable (For Fleet)	1
7	10030510	Accelerator Cable (For Freedom & Shuttle 2+2)	1
8	680366	Lower Governor Bracket	1
9	694322	Governor Guard	1
10	10029060	Upper Governor Bracket	1
11	10032138	Governor Cable/Direction Selector Bracket	1
12	602330	Flanged Hex Head Bolt, M8 - 1.25 x 30mm Lg, Grade 8.8	1
13	00571G2	Flat Washer, 5/16"	1
14	601326	Button Head Torx Bolt, M6 - 1 x 20mm Lg	1
15	73876G01	Flanged Hex Head Bolt, M6 - 1 x 12mm Lg, Grade 8.8	1
16	693153	Throttle Cable	1
17	606256	Flanged Hex Head Bolt, M10 - 1.25 x 25mm Lg, Grade 8.8	2
18	00797G2	Hex Head Bolt, 1/4" - 20 x 1 1/4" Lg, Grade 8	1
19	11027G2	Flanged Lock Nut, 1/4" - 20	1

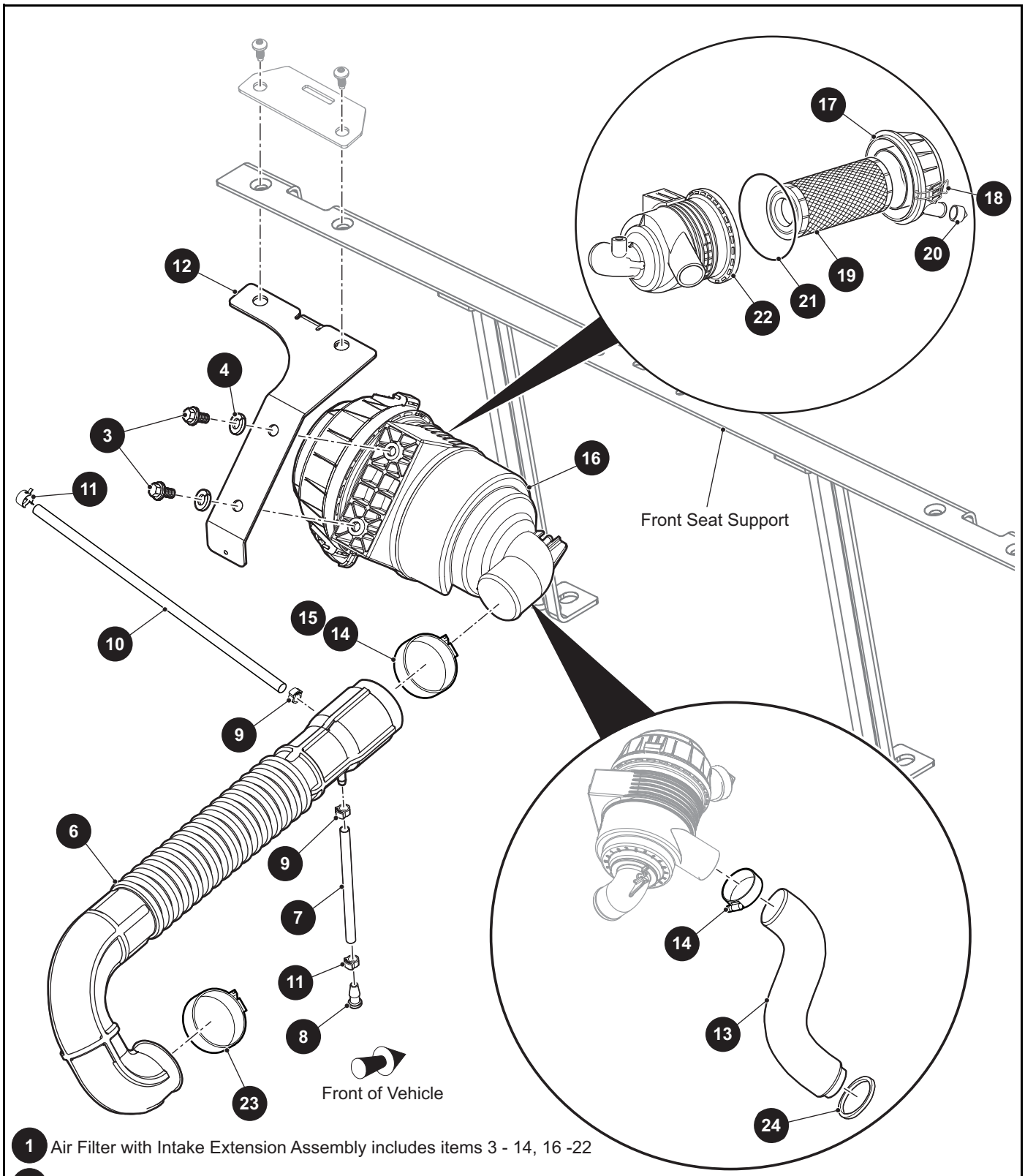

1 Air Filter with Intake Extension Assembly includes items 3 - 14, 16 -22

2 Air Filter without Intake Extension Assembly includes items 3 - 12, 15 - 22

5 Intake Hose Assembly includes items 6 - 11

16 Air Cleaner Assembly includes items 17 - 22

THE USE OF NON U.L. PARTS WILL VOID ANY U.L. LISTING.
When ordering parts, please specify the model and serial number of the product.
* Indicates a component that is not available as an individual part.
*** Indicates consult Customer Service Department for additional information.

ITEM	PART NO.	1 2 3 4 5 DESCRIPTION	QTY.
1	10006898G01	Air Filter with Intake Extension Assembly (Includes Items 3 - 14, 16 - 22)	1
2	10006898G02	Air Filter without Intake Extension Assembly (Includes Items 3 - 12, 15 - 22) .	1
3	606261	Flanged Hex Head Bolt, M8 - 1.25 x 20mm Lg, Grade 8.8	2
4	606272	Lock Washer, 8mm	2
5	695525	Intake Hose Assembly (Includes Items 6 - 11).....	1
6	*	Intake Hose	1
7	685828	Oil Drain Tube	1
8	686875	Hose Plug.....	1
9	696439	Oil Drain Clamp.....	2
10	696641	Vapor Hose	1
11	18292G2	Tube Clamp.....	2
12	692987	Air Cleaner Mounting Bracket.....	1
13	601910	Air Filter Hose, 14" Lg.....	1
14	11391G1	Hose Clamp, 1.31".....	2
15	11391G1	Hose Clamp, 1.31".....	1
16	688989	Air Cleaner Assembly (Includes Items 17 - 22).....	1
17	691746	Air Cleaner Cover.....	1
18	72604G01	Air Cleaner Clip.....	2
19	28463G01	Air Filter.....	1
20	28462G01	Dust Ejector Valve.....	1
21	689987	Seal.....	1
22	689988	Air Cleaner Housing.....	1
23	11391G1	Hose Clamp, 1.31"	1
24	12416G2	Nylon Clamp, 11.8" Lg	1

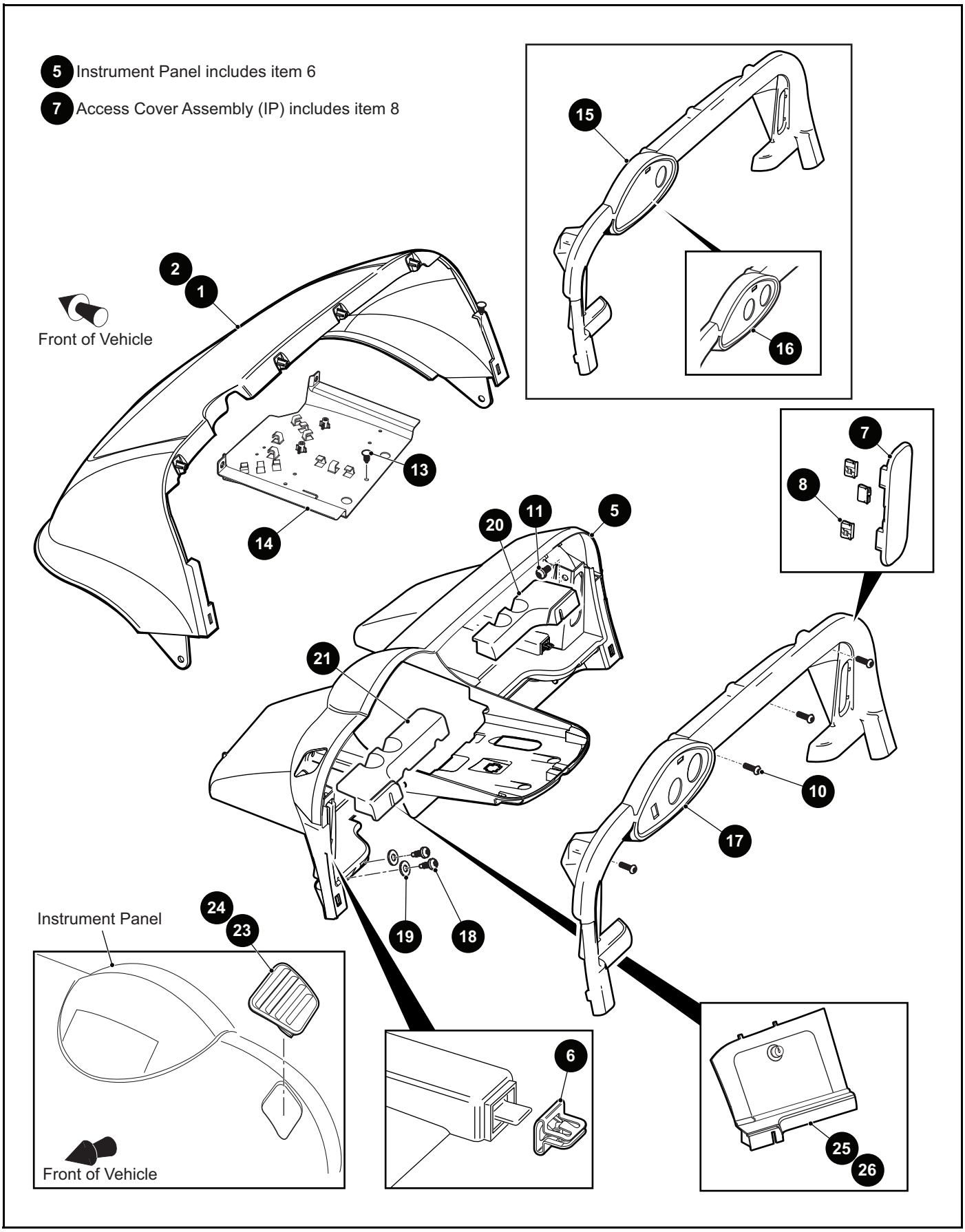
5 Instrument Panel includes item 6
7 Access Cover Assembly (IP) includes item 8
Front of Vehicle
Instrument Panel
Front of Vehicle
1
2
5
6
7
8
10
11
13
14
15
16
17
18
19
20
21
23
24
25
26

THE USE OF NON U.L. PARTS WILL VOID ANY U.L. LISTING.
When ordering parts, please specify the model and serial number of the product.
* Indicates a component that is not available as an individual part.
*** Indicates consult Customer Service Department for additional information.

ITEM	PART NO.	1 2 3 4 5 DESCRIPTION	QTY.
1	645759G00**	Cowl without Lights (See HOW TO USE Section for COLOR CODES) (For Fleet)	1
2	645759G01**	Cowl with Lights (See HOW TO USE Section for COLOR CODES) (For Freedom & Shuttle 2+2)	1
3			
4			
5	602387	Instrument Panel (Includes Item 6)	1
6	602184	Spring Clip	4
7	602388	Access Cover Assembly (IP) (Includes Item 8)	2
8	602100	U-clip	3
9			
10	649803	Pan Head Torx Screw, M6 - 2.65 x 25mm Lg	4
11	70200G01	Truss Head Torx Bolt, 3/8" - 16 x 3/4" Lg	2
12			
13	16816G2	Ratchet Rivet, .25" x .887"	1
14	683595	Front Component Mount Plate	1
15	665572	Instrument Panel Trim (Opening for Key Switch and Malfunction Indicator) (For Fleet)	1
16	666550	Instrument Panel Trim (Opening for Key Switch, SOC and Malfunction Indicator) (For Fleet)	1
17	666551	Instrument Panel Trim (Opening for Key Switch, SOC, Light Switch and Malfunction Indicator) (For Freedom & Shuttle 2+2)	1
18	10025814	Pan Head Taptite Bolt, M8 - 1.25 x 30mm Lg	4
19	604066	Flat Washer, M10	4
20	600241	Ball Holder Insert (Passenger Side)	1
21	600243	Ball Holder Insert (Driver Side)	1
22			
23	602993	Grommet (Driver Side) (Used for Vehicles without Sun Top)	1
24	602994	Grommet (Passenger Side) (Used for Vehicles without Sun Top)	1
25	607131	Glove Box (Passenger Side)	1
26	607533	Glove Box (Driver Side)	1

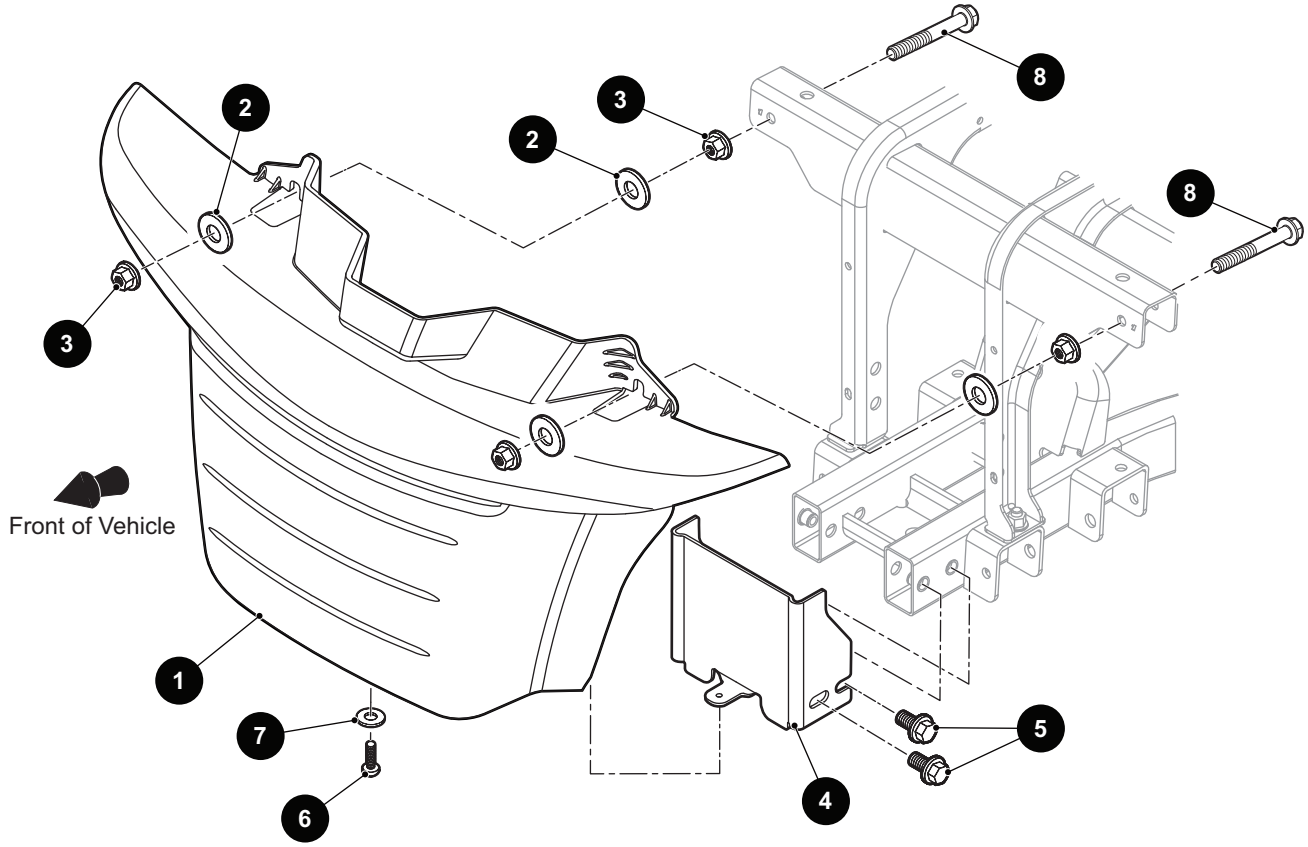

11 Center Console, Base Assembly includes item 13

12 Center Console, USB Assembly includes item 14

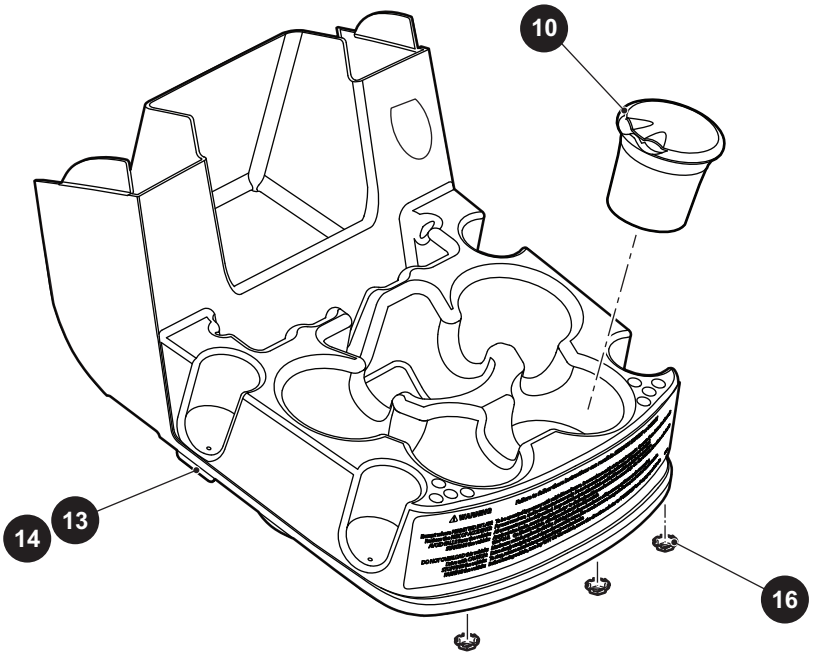

THE USE OF NON U.L. PARTS WILL VOID ANY U.L. LISTING.
When ordering parts, please specify the model and serial number of the product.
* Indicates a component that is not available as an individual part.
*** Indicates consult Customer Service Department for additional information.

ITEM	PART NO.	1 2 3 4 5 DESCRIPTION	QTY.
1	10014753	Front Fascia	1
2	604066	Flat Washer, M10	4
3	600525	Flanged Lock Nut, M10 - 1.5	4
4	10018508	Bumper Attachment Bracket	1
5	603799	Flanged Hex Head Bolt, M10 - 1.5 x 25mm Lg, Grade 8.8	4
6	646348	Thread Forming Screw, 1/4" - 20 x 1" Lg	1
7	646345	Flat Washer, 1/4"	1
8	602415	Flanged Hex Head Bolt, M10 - 1.5 x 80mm Lg	2
9			
10	603725	Ashtray	1
11	686696G01	Center Console, Base Assembly (Includes Item 13)	1
12	686696G02	Center Console, USB Assembly (Includes Item 14)	1
13	694334G01	Center Console, Base	1
14	694334G02	Center Console, USB	1
15			
16	71597G01	Self Threading Nut, .226"	3

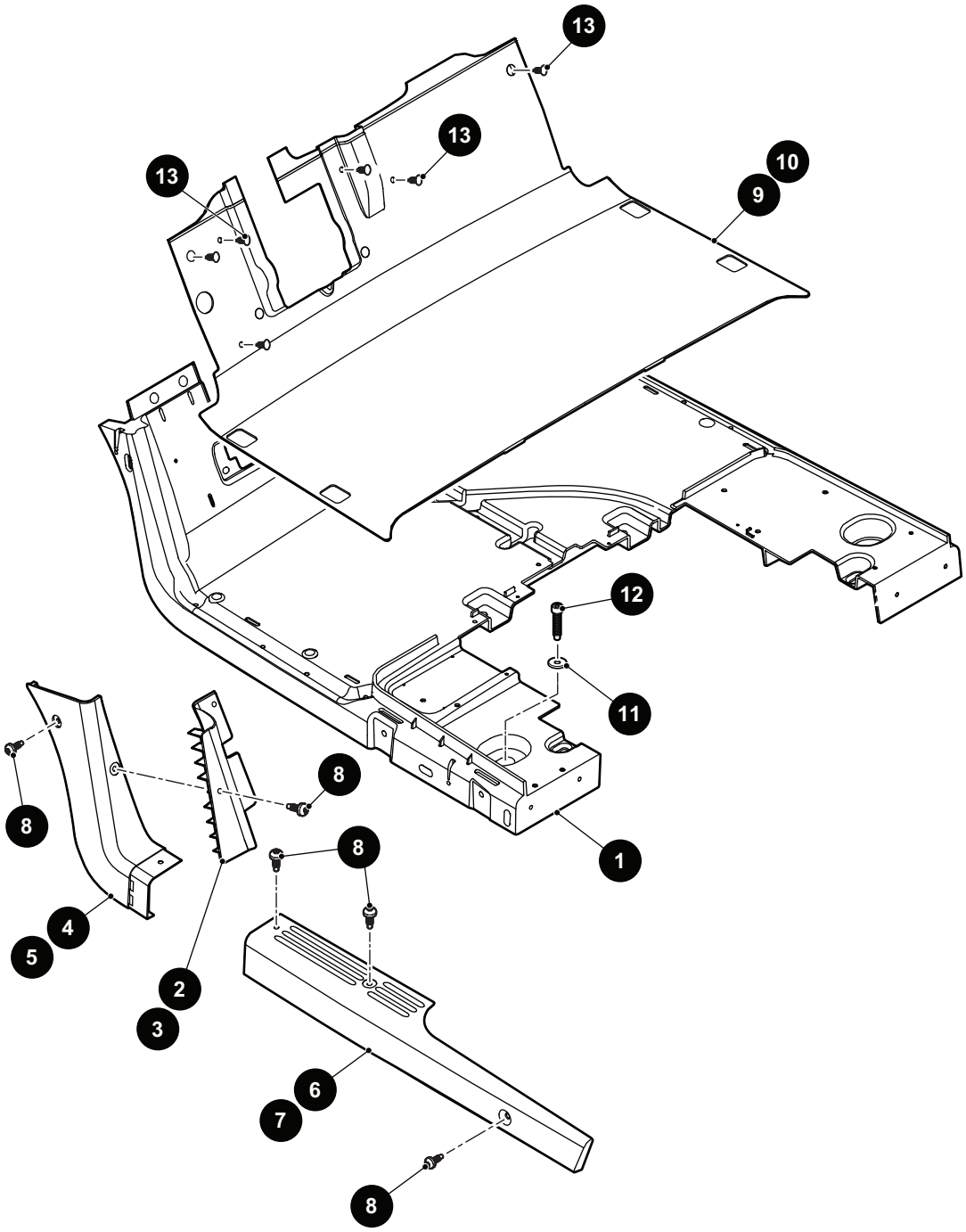
13
13
13
10
9
12
11
8
8
8
1
4
5
2
3
6
7
8

THE USE OF NON U.L. PARTS WILL VOID ANY U.L. LISTING.
When ordering parts, please specify the model and serial number of the product.
* Indicates a component that is not available as an individual part.
*** Indicates consult Customer Service Department for additional information.

ITEM	PART NO.	1 2 3 4 5 DESCRIPTION	QTY.
1	10024752	Floorboard	1
2	10017979G01	Upper Rocker Adapter (Driver Side)	1
3	10017979G02	Upper Rocker Adapter (Passenger Side)	1
4	601257	Upper Rocker Panel (Driver Side)	1
5	601258	Upper Rocker Panel (Passenger Side)	1
6	600253	Lower Rocker Panel (Driver Side)	1
7	600257	Lower Rocker Panel (Passenger Side)	1
8	649804	Button Head Torx Screw, M8 - 3.5 x 30mm Lg	10
9	687964	Floormat (For Fleet)	1
10	10030247	Floormat (For Freedom & Shuttle 2+2)	1
11	604066	Flat Washer, M10	2
12	602020	Socket Head Torx Bolt, M10 - 1.5 x 50mm Lg, Grade 8.8	2
13	16816G1	Ratchet Rivet, 25" x .680"	6

1 Rear Body Assembly without Lights includes items 2, 3

5 Rear Body Assembly with Lights includes items 6 - 8

6 Rear Body Assembly with Lights includes items 7 - 8

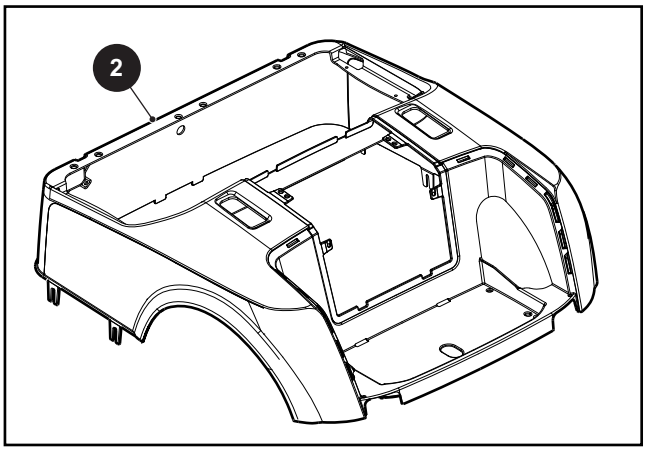

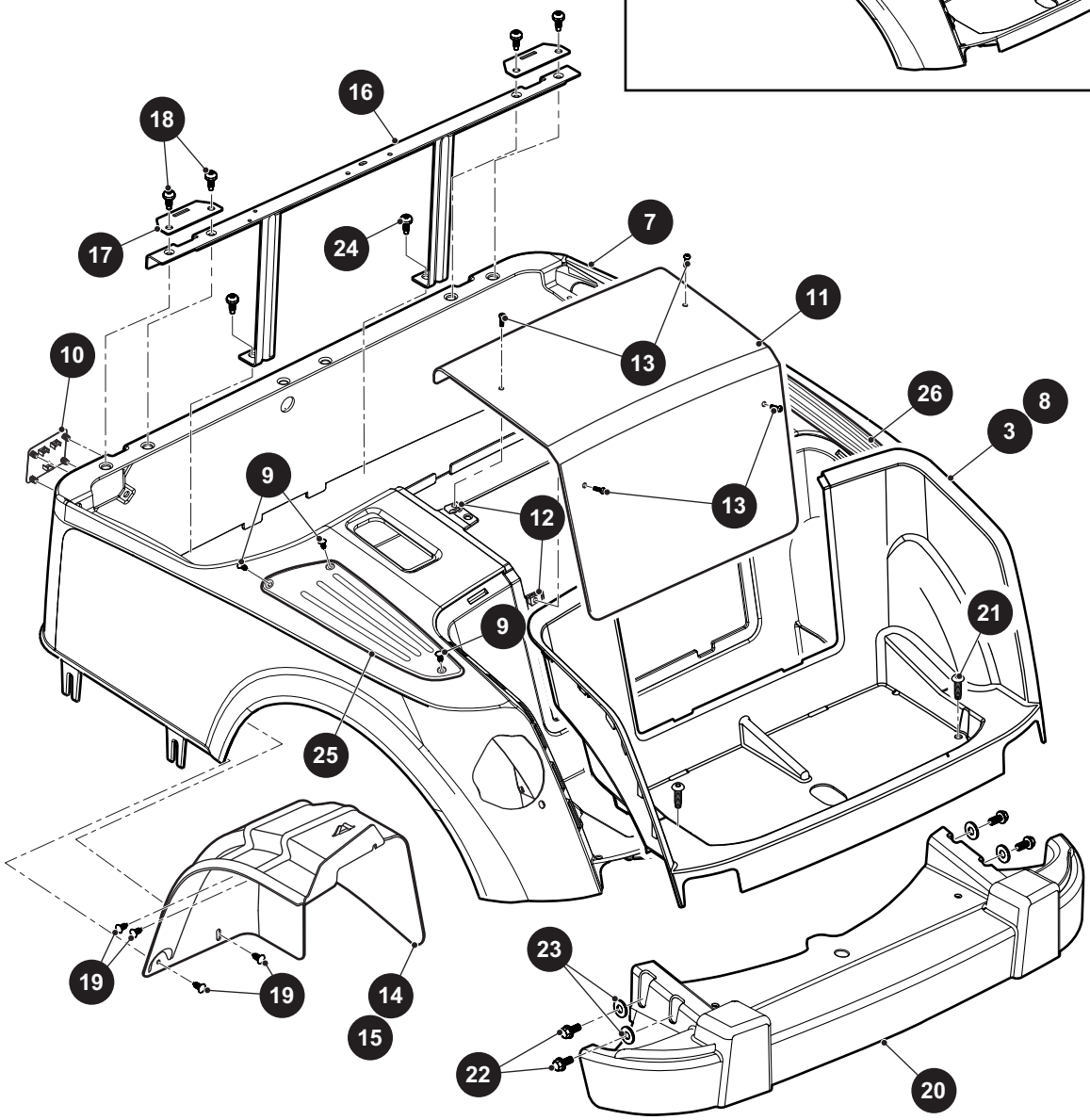

THE USE OF NON U.L. PARTS WILL VOID ANY U.L. LISTING.
When ordering parts, please specify the model and serial number of the product.
* Indicates a component that is not available as an individual part.
*** Indicates consult Customer Service Department for additional information.

ITEM	PART NO.	1 2 3 4 5 DESCRIPTION	QTY.
1	650353G00**	Rear Body Assembly without Lights (Includes Items 2, 3) (See HOW TO USE Section for COLOR CODES) (For Fleet)	1
2	650311G00**	Body	1
3	650254	Bagwell Liner	1
4			
5	650353G04**	Rear Body Assembly with Lights (See HOW TO USE Section for COLOR CODES) (Includes Items 6 - 8) (For Freedom & Shuttle 2+2)	1
6	650353G00**	Rear Body Assembly With Lights (See Color Codes In How To Use Section) (Includes Items 7 - 8)	1
7	650311G00**	Body	1
8	650254	Bagwell Liner	1
9	16816G5	Ratchet Rivet, .187" x .550"	6
10	666065	Receptacle Cover Assembly	1
11	650443	Access Cover	1
12	*	Barrel Clip, M6 - 1	4
13	601326	Button Head Torx Bolt, M6 - 1 x 20mm Lg, Grade 8.8	4
14	601621	Rear Splash Guard (Driver Side)	1
15	601622	Rear Splash Guard (Passenger Side)	1
16	601921	Front Seat Support Assembly	1
17	602558	Seat Hinge Plate	2
18	602572	Pan Head Taptite Bolt, M10 - 1.5 x 20mm Lg, Grade 8.8	4
19	16816G2	Ratchet Rivet, .25" x .887"	8
20	689702	Rear Bumper	1
21	649804	Button Head Torx Screw, M8 - 3.50 x 30mm Lg	2
22	603799	Flanged Hex Head Bolt, M10 - 1.5 x 25mm Lg, Grade 8.8	4
23	00643G1	Flat Washer, 3/8"	4
24	602572	Pan Head Taptite Bolt, M10 - 1.5 x 20mm Lg, Grade 8.8	2
25	639807G01	Scuff Guard (Driver Side)	1
26	639807G02	Scuff Guard (Passenger Side)	1

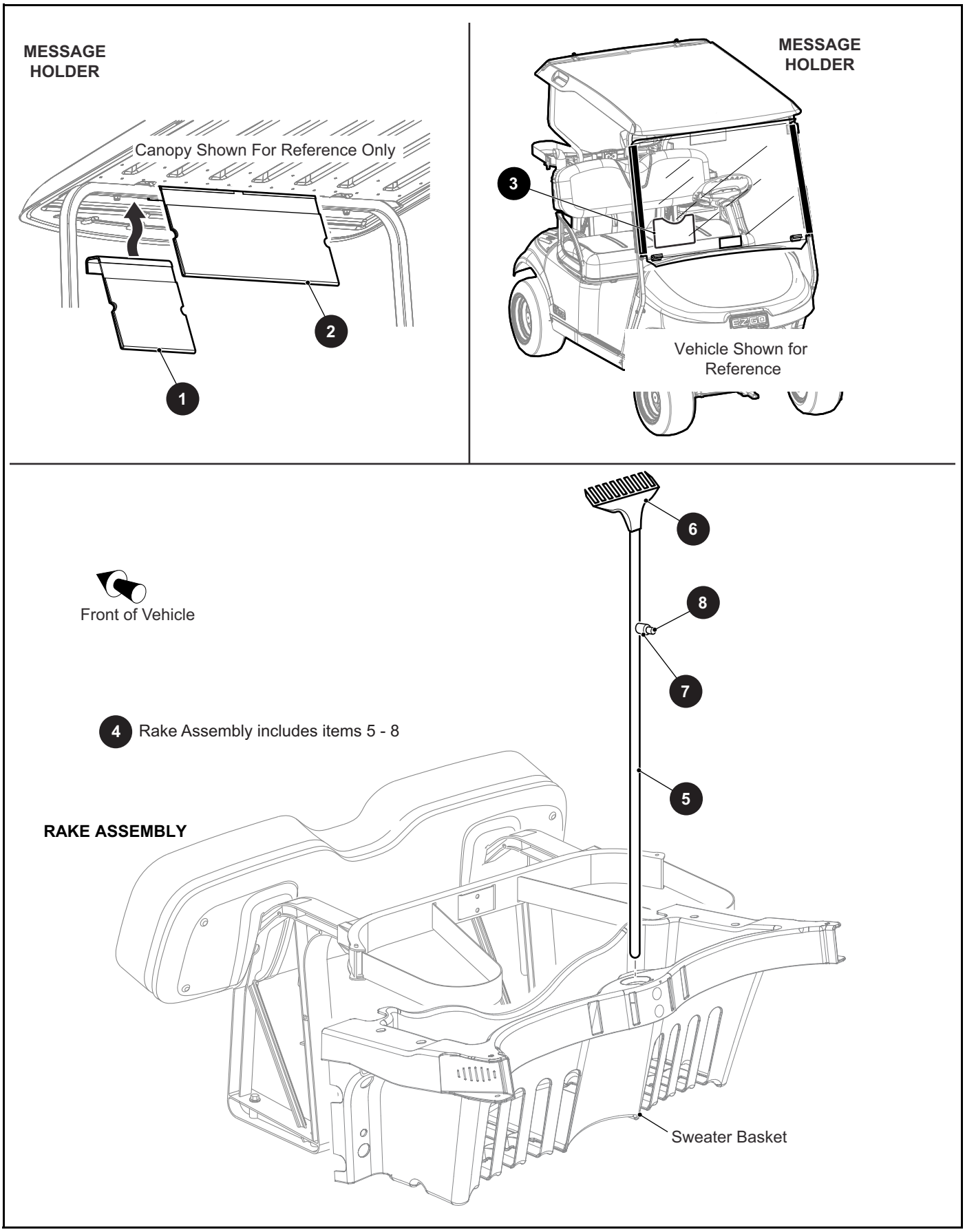
MESSAGE HOLDER
Canopy Shown For Reference Only
1
2
MESSAGE HOLDER
3
Vehicle Shown for Reference
6
8
7
5
Front of Vehicle
4 Rake Assembly includes items 5 - 8
RAKE ASSEMBLY
Sweater Basket

THE USE OF NON U.L. PARTS WILL VOID ANY U.L. LISTING.
When ordering parts, please specify the model and serial number of the product.
* Indicates a component that is not available as an individual part.
*** Indicates consult Customer Service Department for additional information.

ITEM	PART NO.	1 2 3 4 5 DESCRIPTION	QTY.
1	609308	Message Holder (Single)	1
2	617613	Message Holder (Double)	1
3	697249	Message Holder (Mounted on Windshield)	1
4	14735G1	Rake Assembly (For Fleet & Freedom Only) (Includes Items 5 - 8)	1
5	14736G2	Rake Handle	1
6	14737G1	Rake	1
7	14934G1	Spacer	1
8	00130G8	Round Head Phillips Wood Screw, #10 - 13 x 1" Lg	1

FOR FLEET & FREEDOM ONLY

15 Sand Bottle Kit includes items 16 - 25

18 Sand Bottle Hardware Kit includes items 19 - 25

26 Sand Bottle Hardware Kit (High Mount) includes items 24, 25 and 27, 28

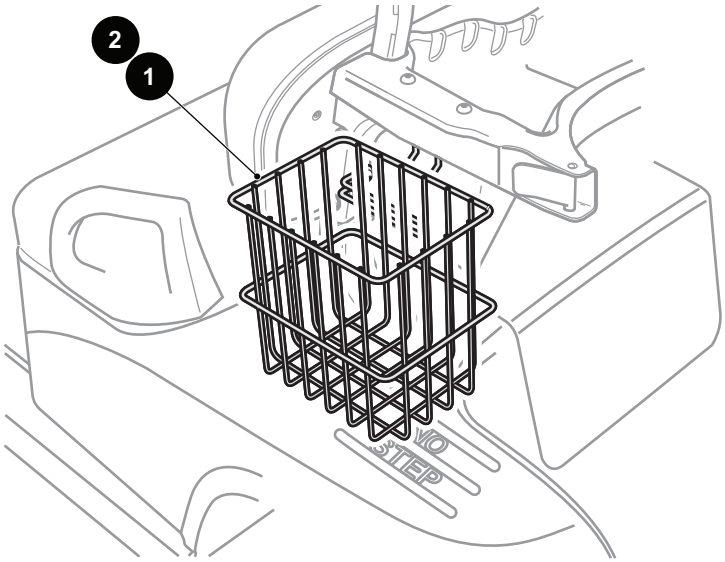

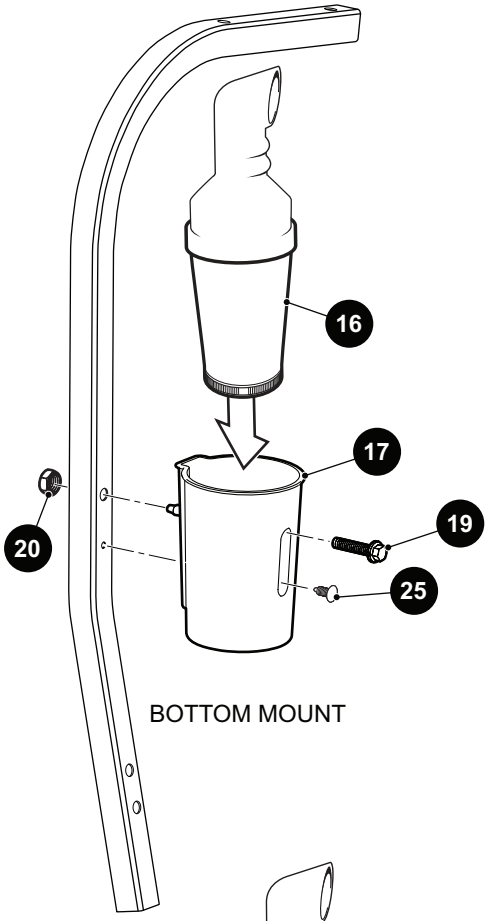

5 Beverage Cooler Kit includes items 6 - 11

7 Hardware Kit includes items 8 - 10

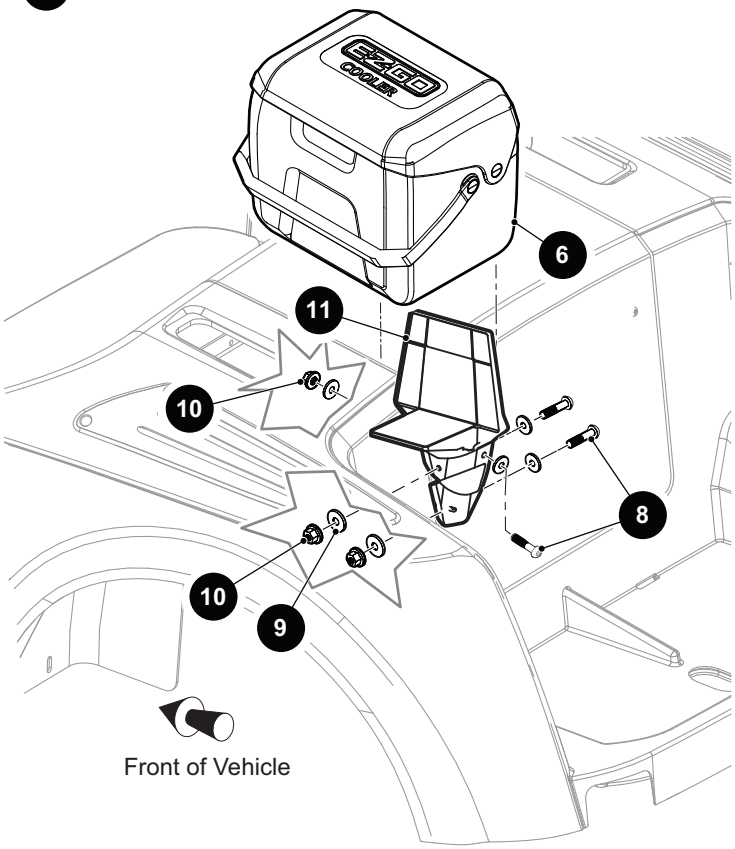

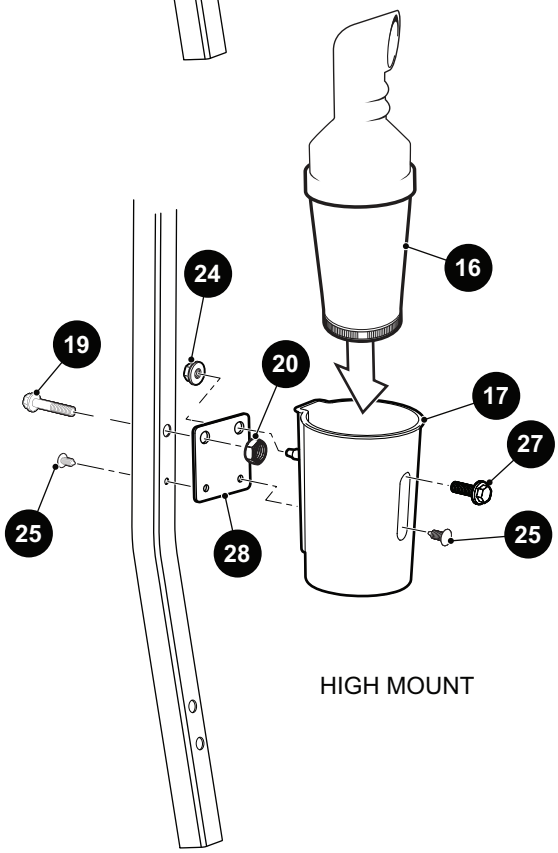

THE USE OF NON U.L. PARTS WILL VOID ANY U.L. LISTING.
When ordering parts, please specify the model and serial number of the product.
* Indicates a component that is not available as an individual part.
*** Indicates consult Customer Service Department for additional information.

ITEM	PART NO.	1 2 3 4 5 DESCRIPTION	QTY.
1	603846	Side Basket (Driver Side)	1
2	603702	Side Basket (Passenger Side)	1
3			
4			
5	689255	Beverage Cooler Kit (Includes Items 6 - 11)	1
6	658503	Beverage Cooler	1
7	689269	Hardware Kit (Includes Items 8 - 10)	1
8	*	Truss Head Bolt, M6 x 1	3
9	*	Flat Washer, M6 x 18	6
10	*	Lock Nut, M6 x 1	3
11	689244	Universal Bracket	1
12			
13			
14			
15	614179	Sand Bottle Kit (Includes Items 16 - 25)	1
16	600612	Sand Bottle	1
17	28660G01	Sand Bottle Holder	1
18	614191	Sand Bottle Hardware Kit (Includes Items 19 - 25)	1
19	603800	Flanged Hex Head Bolt, M10 - 1.5 x 50mm Lg	1
20	800706	Lock Nut, M10 - 1.5	1
21	71102G01	Hex Washer Head Bolt, 1/4" - 20 x 3/4" Lg, Grade 5 (Not Illustrated).	1
22	602572	Pan Head Taptite Bolt, M10 - 1.5 x 20mm Lg (Not Illustrated)	1
23	*	Hex Head Bolt, 1/4" - 20 (Not Illustrated)	1
24	600525	Flanged Lock Nut, M10 - 1.5	1
25	16816G2	Ratchet Rivet, .25" x .887"	1
26	647306	Sand Bottle Hardware Kit (High Mount) (Includes Items 24, 25 and 27, 28)	1
27	603799	Flanged Hex Head Bolt, M10 - 1.5 x 25mm Lg	1
28	647797	Bracket	1

FOR FLEET & FREEDOM ONLY

1 Sand Bucket Kit includes items 2 - 8

5 Hardware Kit includes items 6 - 8

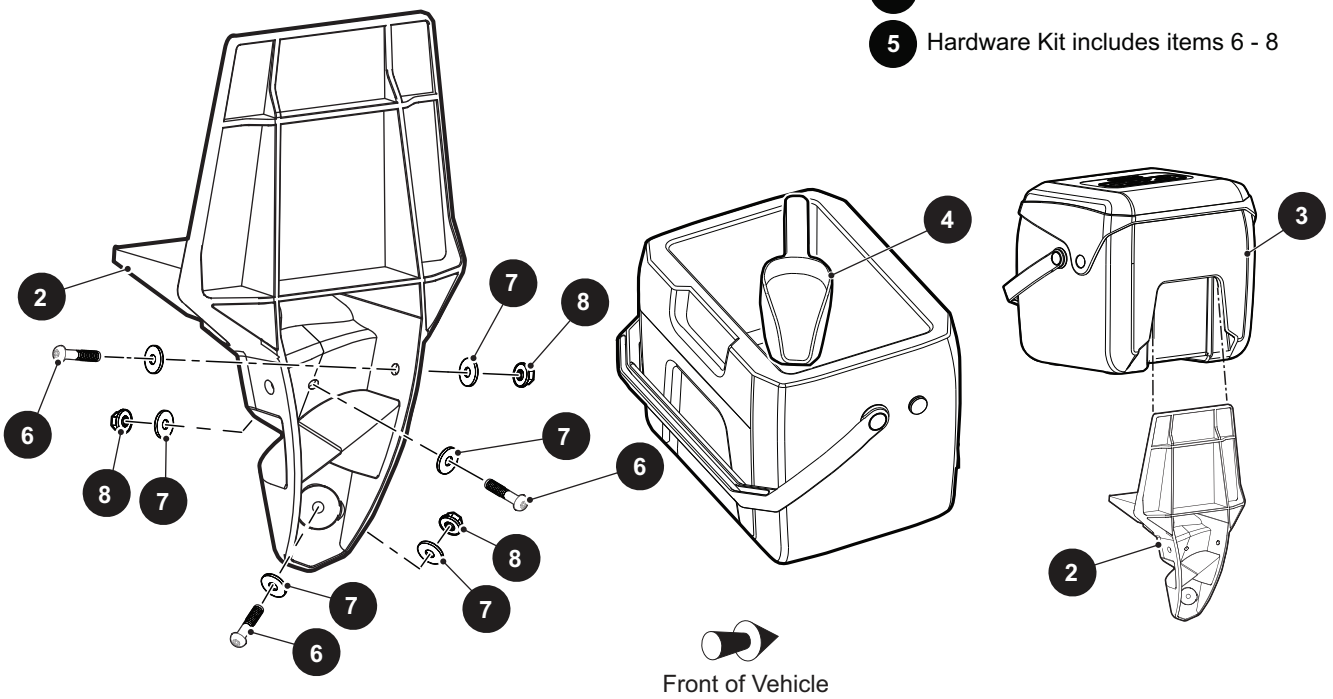

15 Club and Ball Washer Kit (Driver Side) includes items 17 - 27 & 29

16 Club and Ball Washer Kit (Passenger Side) includes items 17 - 28

17 Club and Ball Washer Hardware Kit includes items 18 - 27

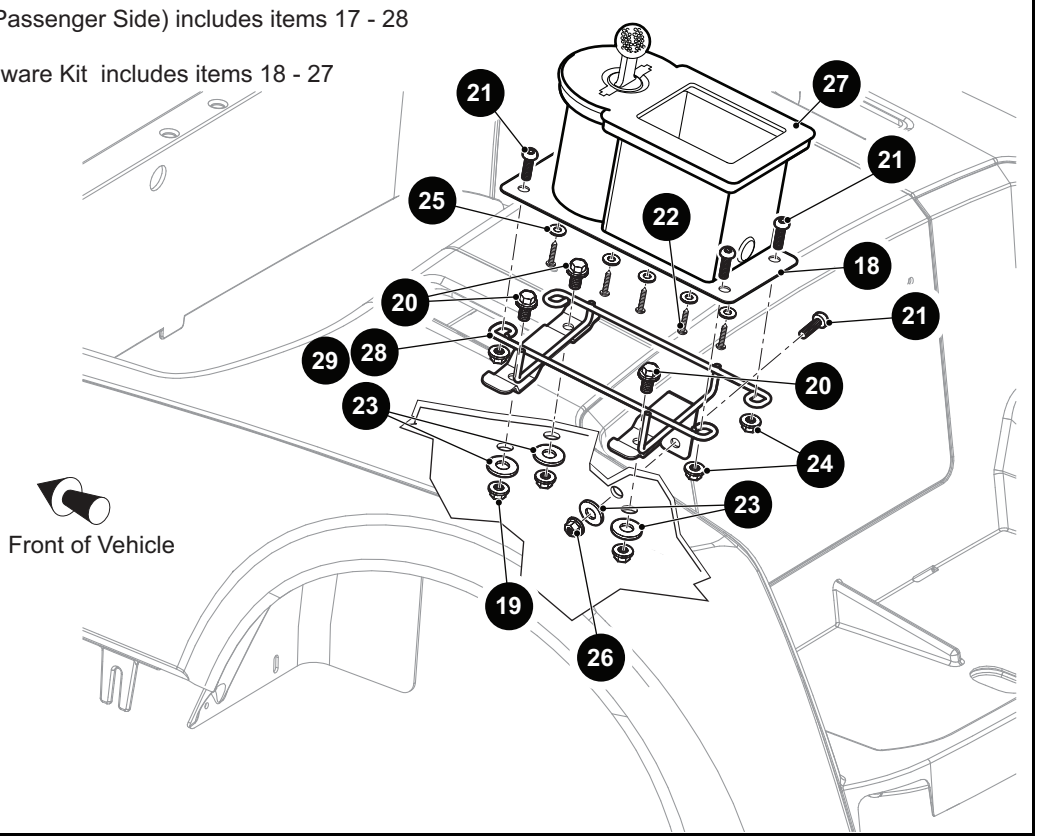

THE USE OF NON U.L. PARTS WILL VOID ANY U.L. LISTING.
When ordering parts, please specify the model and serial number of the product.
* Indicates a component that is not available as an individual part.
*** Indicates consult Customer Service Department for additional information.

ITEM	PART NO.	1 2 3 4 5 DESCRIPTION	QTY.
1	689254	Sand Bucket Kit (Includes Items 2 - 8)	1
2	689244	Universal Bracket	1
3	662248	Sand Bucket	1
4	74848G01	Scoop	1
5	689269	Hardware Kit (Includes Items 6 - 8)	1
6	*	Truss Head Torx Bolts, M6 - 1 x 30mm Lg	3
7	*	Flat Washer, M6 - 30	6
8	*	Hex Lock Nuts, M6 - 1	3
9			
10			
11			
12			
13			
14			
15	643092	Club and Ball Washer Kit (Driver Side) (Includes Items 17 - 27 & 29)	1
16	643094	Club and Ball Washer Kit (Passenger Side) (Includes Items 17 - 28)	1
17	643161	Club and Ball Washer Hardware Kit (Includes Items 18 - 27)	1
18	604384	Club and Ball Washer Plate	1
19	606274	Flanged Hex Nut, M10 - 1.25	3
20	606256	Flanged Hex Head Bolt, M10 - 1.25 x 25mm Lg, Grade 8.8	3
21	600530	Button Head Torx Bolt, M10 - 1.5 x 25mm Lg, Grade 8.8	5
22	608732	Pan Head Phillips Screw, M8	5
23	608520	Flat Washer, M10	4
24	600525	Lock Nut, M10 - 1.5	4
25	608747	Flat Washer, M6 x 1.5	5
26	614974	Torque Nut, M10 - 1.5	1
27	603836	Club and Ball Washer	1
28	643093	Mounting Bracket (Passenger Side)	1
29	643091	Mounting Bracket (Driver Side)	1

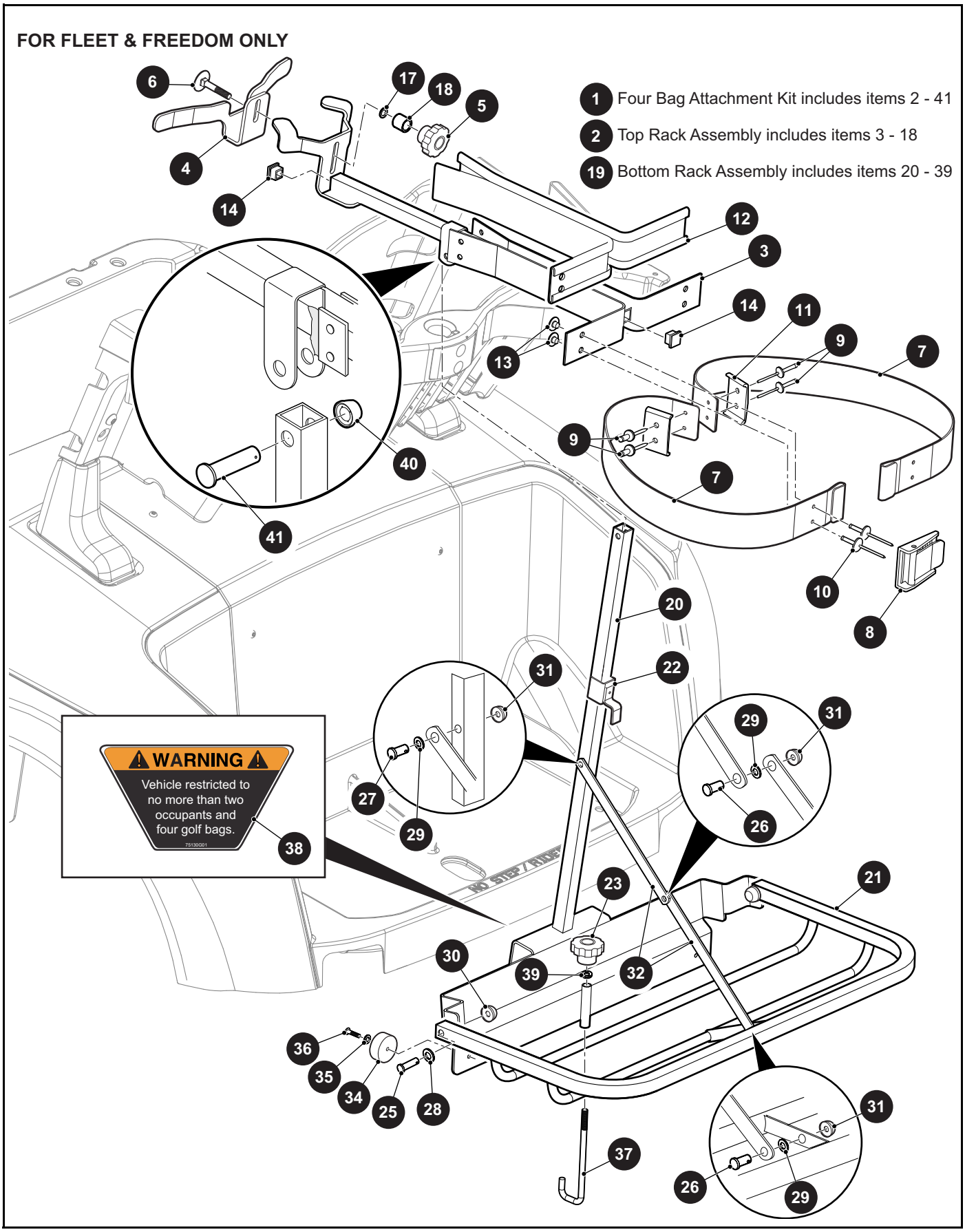
FOR FLEET & FREEDOM ONLY
1 Four Bag Attachment Kit includes items 2 - 41
2 Top Rack Assembly includes items 3 - 18
19 Bottom Rack Assembly includes items 20 - 39
WARNING
Vehicle restricted to no more than two occupants and four golf bags.
75130G01
NO STEP / RIDE

THE USE OF NON U.L. PARTS WILL VOID ANY U.L. LISTING.
When ordering parts, please specify the model and serial number of the product.
* Indicates a component that is not available as an individual part.
*** Indicates consult Customer Service Department for additional information.

ITEM	PART NO.	1 2 3 4 5 DESCRIPTION	QTY.
1	646547	Four Bag Attachment Kit (Includes Items 2 - 41)	1
2	646557	Top Rack Assembly (Includes Items 3 - 18)	1
3	646556	Top Mount Rack	1
4	608939	Under Mount Bracket	1
5	75337G01	Knob, 5/16" - 18	1
6	00724G5	Elevator Bolt, 5/16" - 18 x 2" Lg	1
7	17641G1	Strap (Four Bag Rack)	2
8	16920G1	Strap Retainer Assembly	2
9	17226G1	Rivet, .1/4" x 5/8" Lg	4
10	15058G1	Rivet (Aluminum), 3/16" x .45" Lg	4
11	16610G1	Anchor Plate	2
12	14643G3	Vinyl Extrusion	2
13	16935G1	Tee Nut	4
14	19859G1	Tube Cap, 3/4" Sq	2
15	17618G1	Nylon Clamp, 8" Lg (Not Illustrated)	2
16	14382G7	Strip (Noise Suppressor) (Not Illustrated)	2
17	00567G8	Lock Washer (External Tooth Type), 5/16"	1
18	75048G04	Spacer	1
19	647152	Bottom Rack Assembly (Includes Items 20 - 39)	1
20	*	Lower Mount	1
21	*	Four Bag Bottom Assembly	1
22	*	Latch Assembly	1
23	*	Knob, 5/16" - 18	1
24	*	Vinyl Shrink Tubing (Not Illustrated)	1
25	*	Clevis Pin, 3/8" x 1.25"	2
26	*	Clevis Pin, 5/16" x .625"	2
27	*	Clevis Pin, 5/16" x 1.25"	1
28	*	Flat Washer, 3/8"	2
29	*	Flat Washer, 5/16"	3
30	*	Cap Nut (Black), 3/8"	2
31	*	Cap Nut (Plastic), 5/16"	3

BODY

THE USE OF NON U.L. PARTS WILL VOID ANY U.L. LISTING.
When ordering parts, please specify the model and serial number of the product.
* Indicates a component that is not available as an individual part.
*** Indicates consult Customer Service Department for additional information.

ITEM	PART NO.	1 2 3 4 5 DESCRIPTION	QTY.
32	*	Brace	2
33	*	Nylon Clamp, 8" Lg (Not Illustrated)	1
34	*	Rubber Bumper	2
35	*	Flat Washer, #10	2
36	*	Rivet, 3/16 x 13/16"	2
37	*	Retainer Rod	1
38	*	Warning Label	1
39	*	Lock Washer, 5/16"	1
40	28129G01	Cap Nut (Plastic), 5/16"	1
41	17651G2	Clevis Pin, 5/16" x 1.25"	1

Notes:

FOR FREEDOM & SHUTTLE 2+2 ONLY

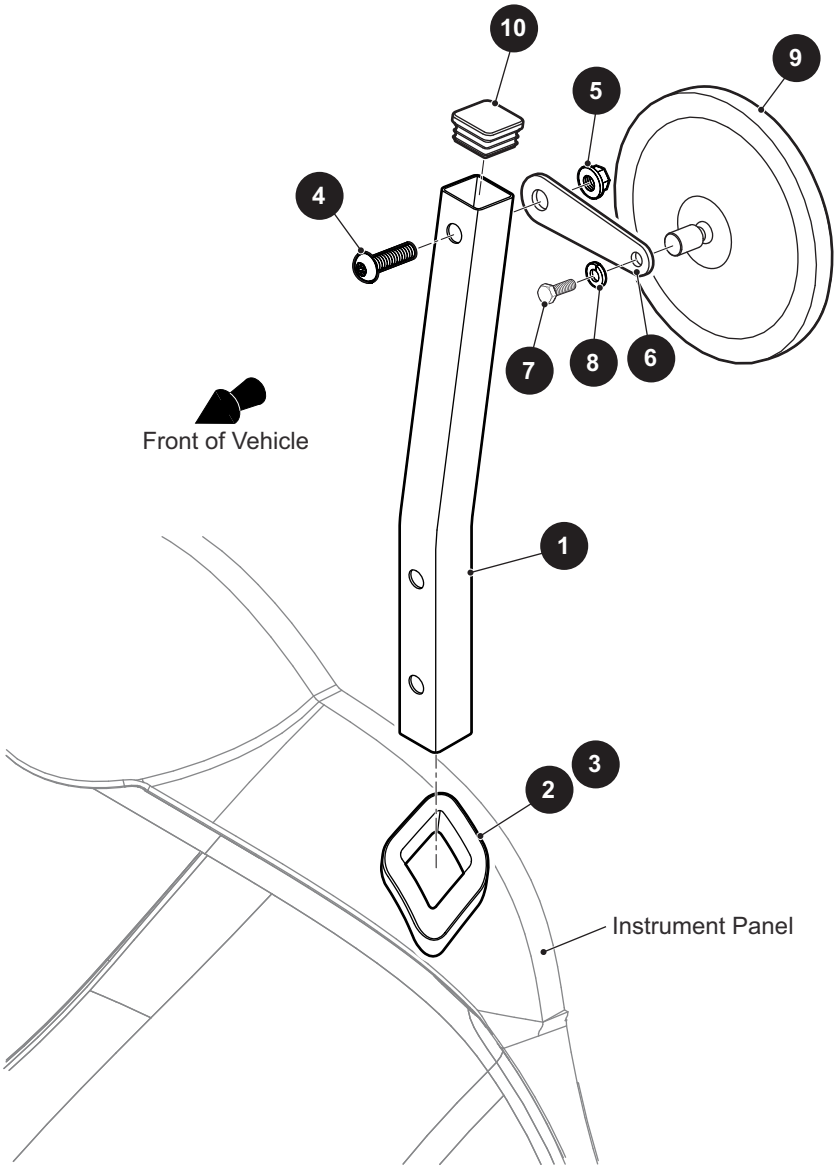

THE USE OF NON U.L. PARTS WILL VOID ANY U.L. LISTING.
When ordering parts, please specify the model and serial number of the product.
* Indicates a component that is not available as an individual part.
*** Indicates consult Customer Service Department for additional information.

ITEM	PART NO.	1 2 3 4 5 DESCRIPTION	QTY.
1	648473	Strut	1
2	602770	Strut Grommet (Driver Side)	1
3	602992	Strut Grommet (Passenger Side)	1
4	600527	Button Head Torx Bolt, M10 - 1.5 x 60mm Lg	1
5	600525	Flanged Lock Nut, M10 - 1.5	1
6	648528	Mirror Bracket	1
7	*	Hex Head Bolt, 1/4" - 20 x 5/8" Lg	1
8	*	Lock Washer, 1/4"	1
9	74202G01	Round Mirror	1
10	620634	End Cap	1

FOR SHUTTLE 2+2 ONLY

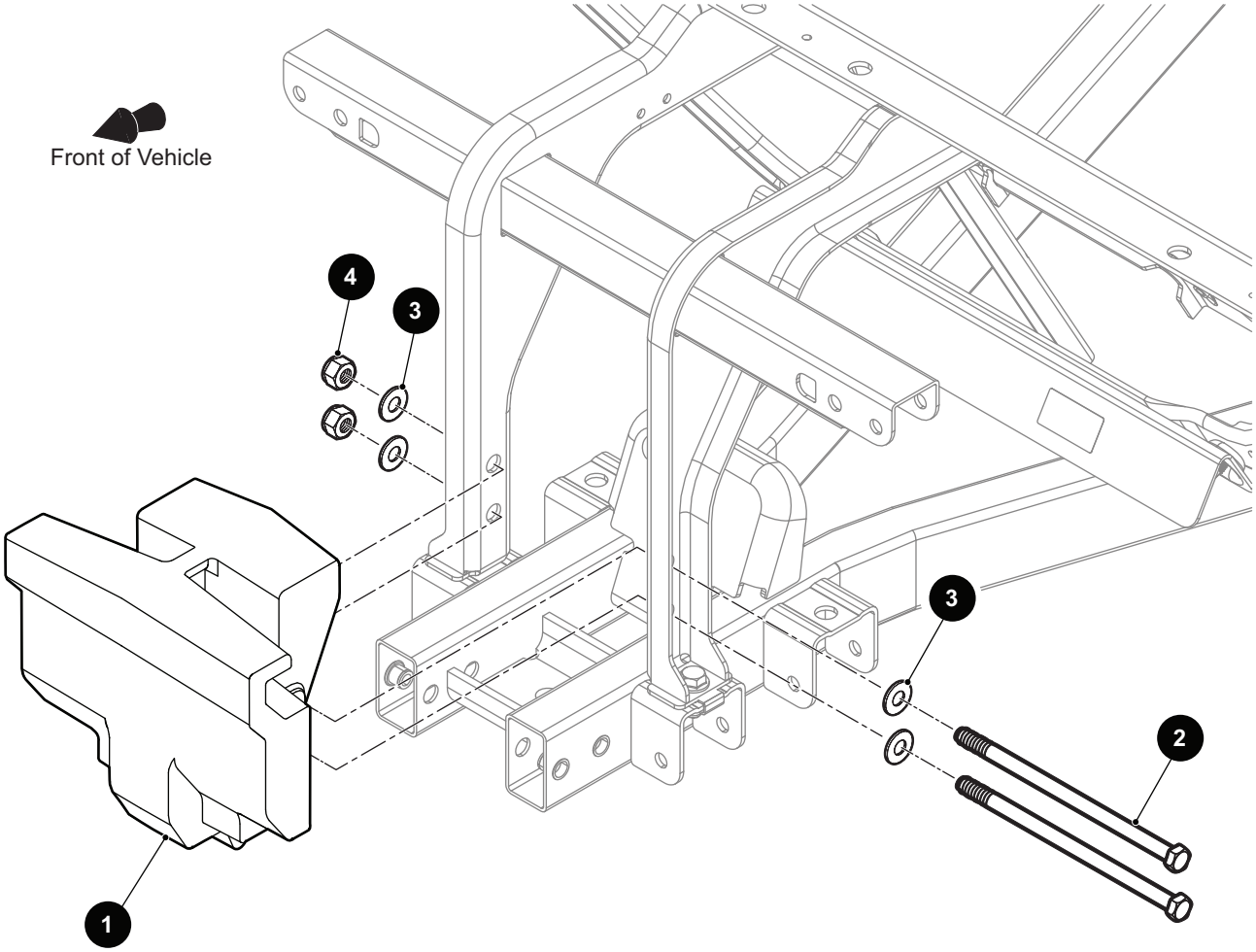

THE USE OF NON U.L. PARTS WILL VOID ANY U.L. LISTING.
When ordering parts, please specify the model and serial number of the product.
* Indicates a component that is not available as an individual part.
*** Indicates consult Customer Service Department for additional information.

ITEM	PART NO.	1 2 3 4 5 DESCRIPTION	QTY.
1	10016135	Front Weight	1
2	659289	Hex Head Bolt, 1/2" - 13 x 7 1/2" Lg	2
3	00560G3	Flat Washer, 1/2"	4
4	14390G6	Lock Nut, 1/2" - 13	2

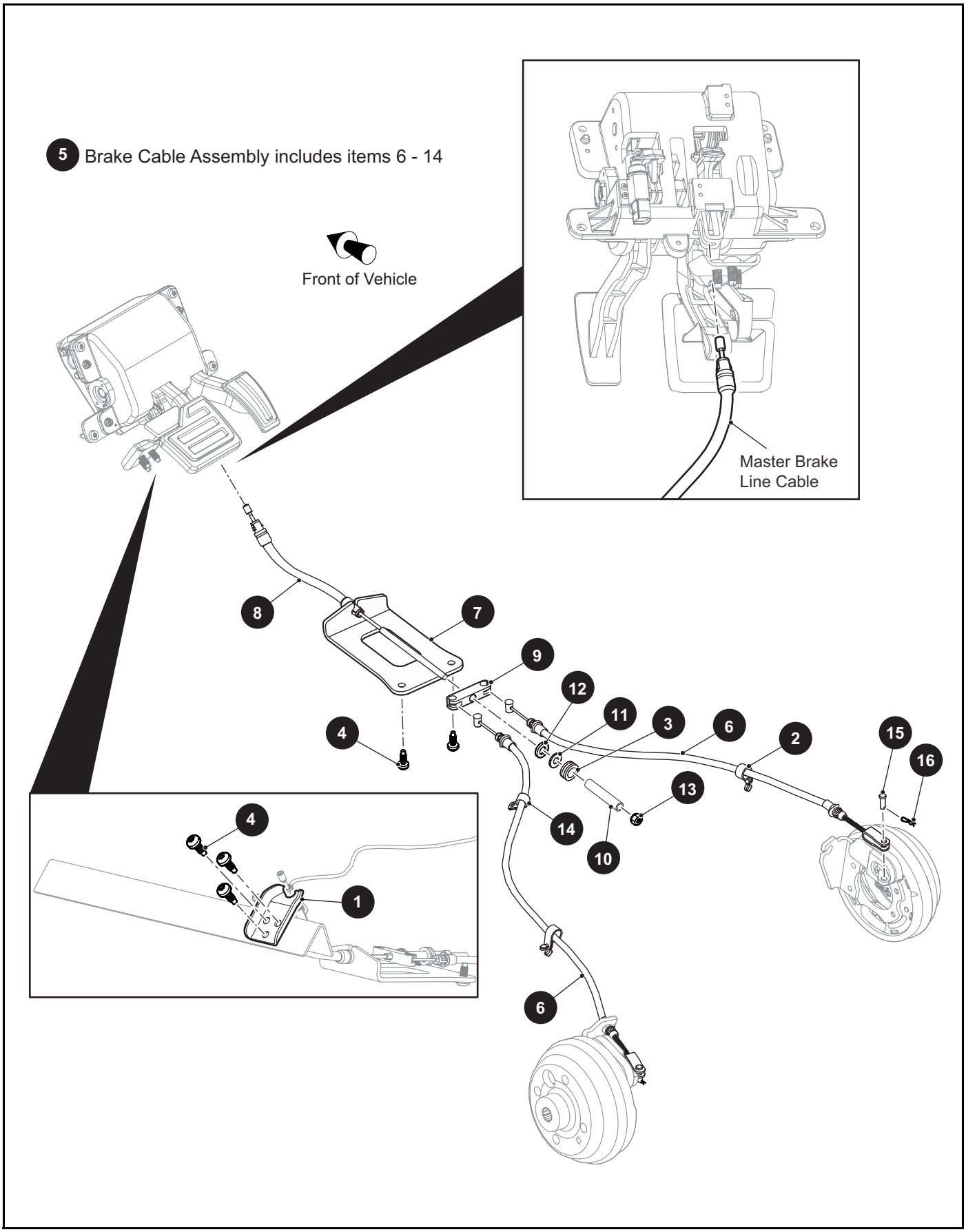
5 Brake Cable Assembly includes items 6 - 14
Front of Vehicle
Master Brake Line Cable
8
7
9
12
11
3
6
2
15
16
4
13
14
10
4
1
6

THE USE OF NON U.L. PARTS WILL VOID ANY U.L. LISTING.
When ordering parts, please specify the model and serial number of the product.
* Indicates a component that is not available as an individual part.
*** Indicates consult Customer Service Department for additional information.

ITEM	PART NO.	1 2 3 4 5 DESCRIPTION	QTY.
1	10007232	Master Brake Cable Bracket	1
2	73864G02	Harness Clamp, 3/4"	2
3	10006978	Grommet, .625 I.D, 1.0 O.D.	1
4	602572	Pan Head Taptite Bolt, M10 - 1.5 x 20mm Lg	5
5	10044148	Brake Cable Assembly (Includes Items 6 - 14)	1
6	10003486	Brake Assembly Cable	2
7	10006958	Bracket	1
8	10006962	Master Brake Line Cable	1
9	10006964	Equalizer	1
10	10007004	Plated Spacer	1
11	10007169	Spherical Washer, 3/8"	1
12	10007170	Spherical Male Washer, 3/8"	1
13	11098G5	Lock Nut, 3/8" - 16	1
14	17618G1	Nylon Clamp, 8" Lg	1
15	10386G3	Clevis Pin, 5/16" x .940"	2
16	677471	Bow Tie Cotter Pin	2

1 Brake Assembly (Driver Side) includes items 3 - 9

2 Brake Assembly (Passenger Side) includes items 3 - 8, 10

16 Brake Drum Assembly includes items 17, 18

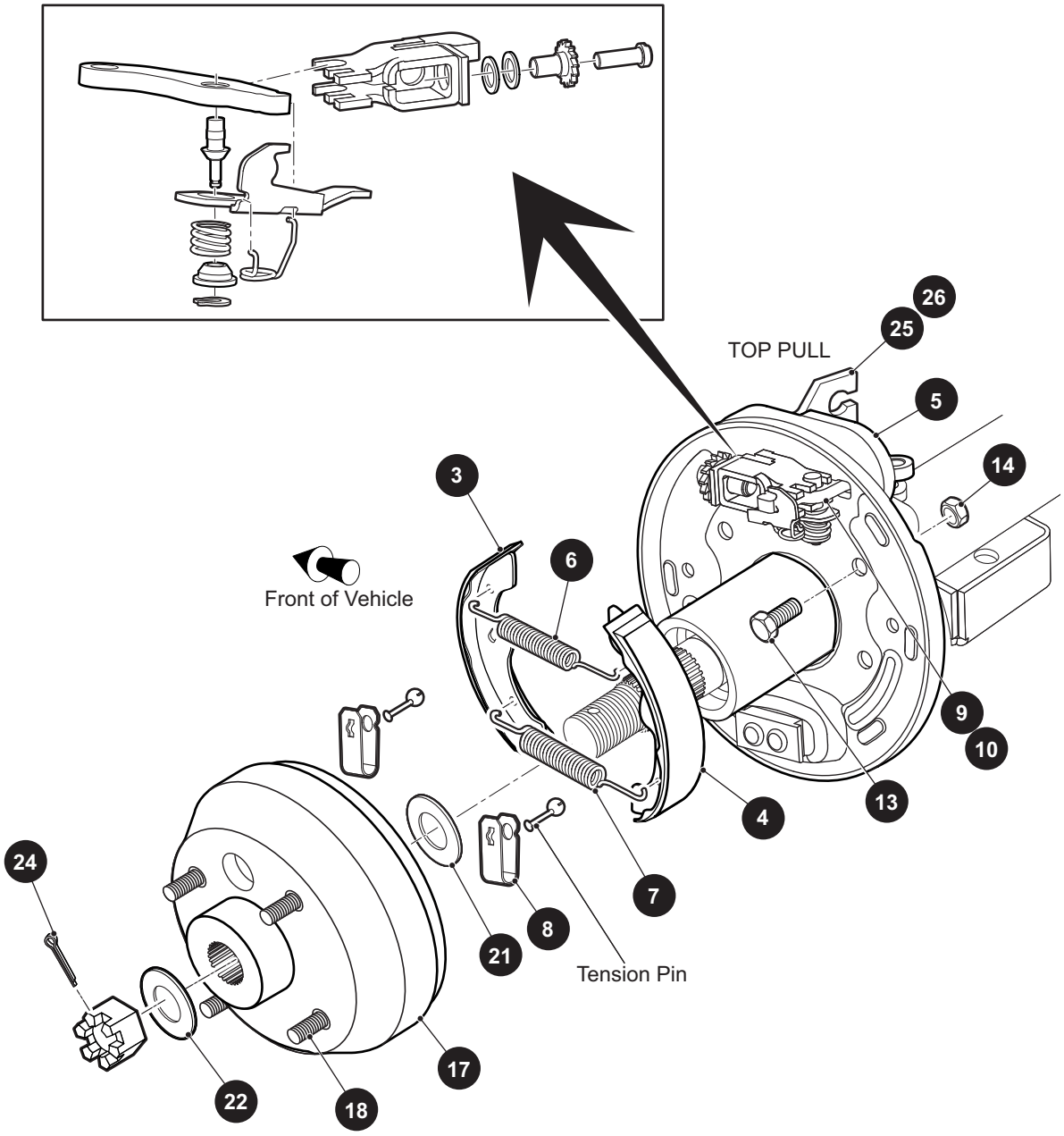

THE USE OF NON U.L. PARTS WILL VOID ANY U.L. LISTING.
When ordering parts, please specify the model and serial number of the product.
* Indicates a component that is not available as an individual part.
*** Indicates consult Customer Service Department for additional information.

ITEM	PART NO.	1 2 3 4 5 DESCRIPTION	QTY.
1	612211	Brake Assembly (Driver Side) (Includes Items 3 - 9)	1
2	612189	Brake Assembly (Passenger Side) (Includes Items 3 - 8, 10)	1
3	612411	Brake Shoe, Leading	1
4	612412	Brake Shoe, Trailing	1
5	612413	Dust Cover	1
6	*	Brake Spring, Top	1
7	612414	Brake Spring, Bottom	1
8	*	Shoe Clamp	2
9	612418	Gear Adjuster (Driver Side)	1
10	612417	Gear Adjuster (Passenger Side)	1
11			
12			
13	17083G2	Hex Head Bolt, 5/16" - 24 x 1" Lg, Grade 8	8
14	15126G1	Lock Nut, 5/16" - 24	8
15			
16	21807G2	Brake Drum Assembly (Includes Items 17, 18)	2
17	*	Brake Drum	1
18	19862G2	Lug Bolt, 1/2" - 20 x 1 3/4" Lg	4
19			
20			
21	21809G1	Flat Washer (Inner Wheel Rim), 1.31" O.D. x .98" I.D	2
22	606945	Flat Washer (Brake Drum), 1.75" O.D. x .886" I.D	2
23			
24	10387G1	Cotter Pin, .125" x 1.50"	2
25	652248	Brake Cable Bracket (Passenger Side)	1
26	652249	Brake Cable Bracket (Driver Side)	1

DIRECTION SELECTOR

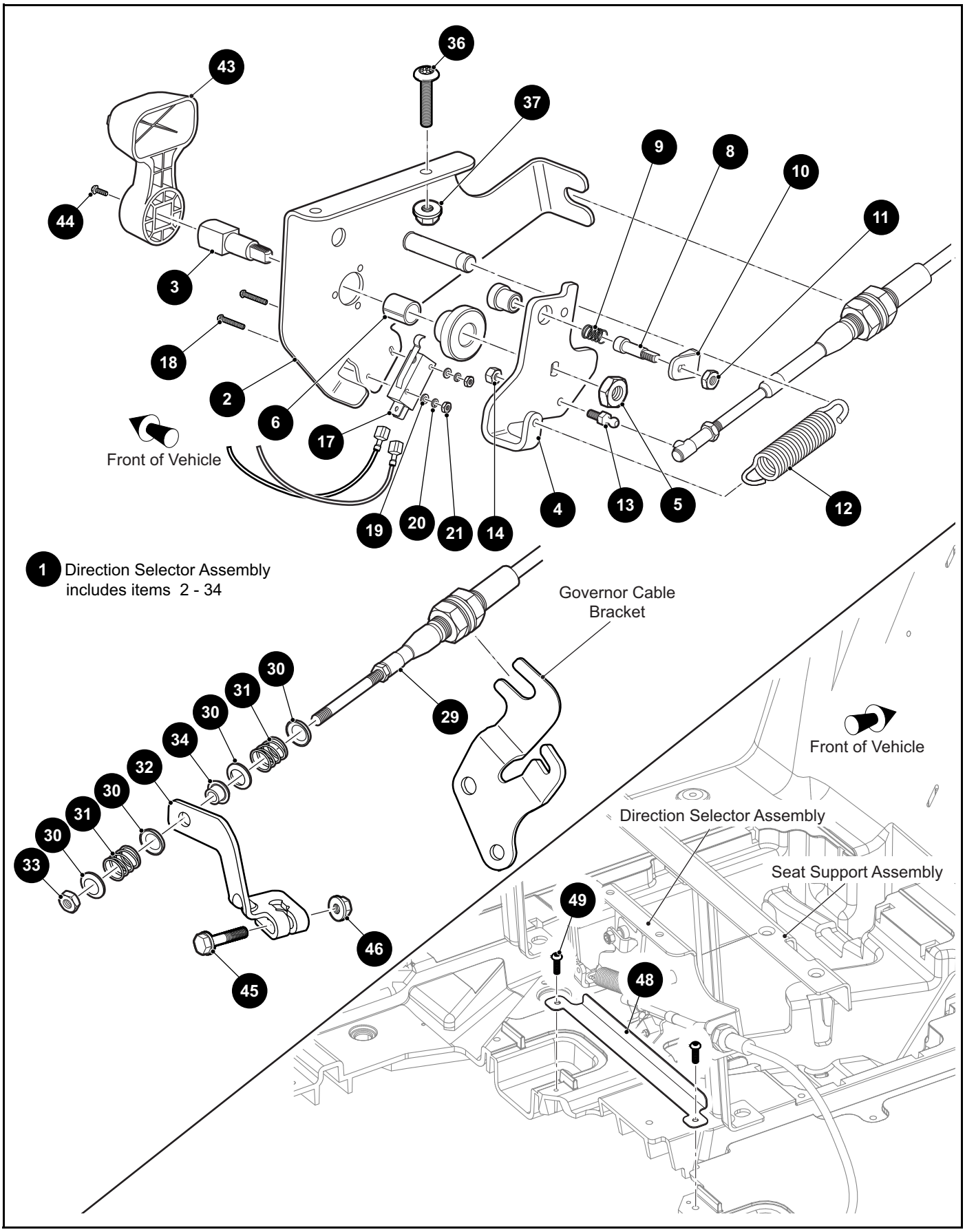

THE USE OF NON U.L. PARTS WILL VOID ANY U.L. LISTING.
When ordering parts, please specify the model and serial number of the product.
* Indicates a component that is not available as an individual part.
*** Indicates consult Customer Service Department for additional information.

ITEM	PART NO.	1 2 3 4 5 DESCRIPTION	QTY.
1	10024335	Direction Selector Assembly (Includes Items 2 - 34)	1
2	603627	Direction Selector Bracket	1
3	608150	Direction Selector Shaft	1
4	603700	Direction Selector Cam	1
5	14390G1	Lock Nut, 3/8" - 24	1
6	25664G2	Bushing, 1/2" x .750" Lg	1
7			
8	72724G01	Neutral Lock Pin	1
9	72733G01	Compression Spring	1
10	72729G01	Neutral Lock Latch	1
11	00734G2	Lock Nut, 1/4" - 28	1
12	28574G01	Extension Spring	1
13	72732G01	Ball Stud, #10 - 32	1
14	00734G5	Lock Nut, #10 - 32	1
15			
16			
17	72736G01	Micro Switch	1
18	01062G01	Round Head Screw, #4 - 40 x 1" Lg	2
19	00559G1	Flat Washer, #4	2
20	00565G1	Lock Washer, #4	2
21	00526G2	Hex Nut, #4 - 40	2
22			
23			
24			
25			
26			
27			
28			
29	603615	Shifter Cable	1
30	25727G01	Cup Washer, 1/4"	4
31	72735G01	Compression Spring	2

DIRECTION SELECTOR

THE USE OF NON U.L. PARTS WILL VOID ANY U.L. LISTING.
When ordering parts, please specify the model and serial number of the product.
* Indicates a component that is not available as an individual part.
*** Indicates consult Customer Service Department for additional information.

ITEM	PART NO.	1 2 3 4 5 DESCRIPTION	QTY.
32	10024330	Pivot Bracket	1
33	00734G5	Lock Nut, #10 - 32	1
34	22754G4	Bushing (Flip Lok), .250"	1
35			
36	601326	Button Head Torx Bolt, M6 - 1 x 20mm Lg, Grade 8.8	2
37	450452	Hex Nut, M6 - 1	2
38			
39			
40			
41			
42			
43	71205G01	Direction Selector Handle	1
44	01037G02	Pan Head Phillips Screw, #10 - 32 x 1/2" Lg	1
45	606421	Flanged Hex Head Bolt, M6 - 1 x 30mm Lg, Grade 8.8	1
46	450452	Hex Nut, M6 - 1	1
47			
48	628573	Body Support	1
49	608290	Self Tapping Screw, #10 - 16 x 3/4" Lg	2

Notes:

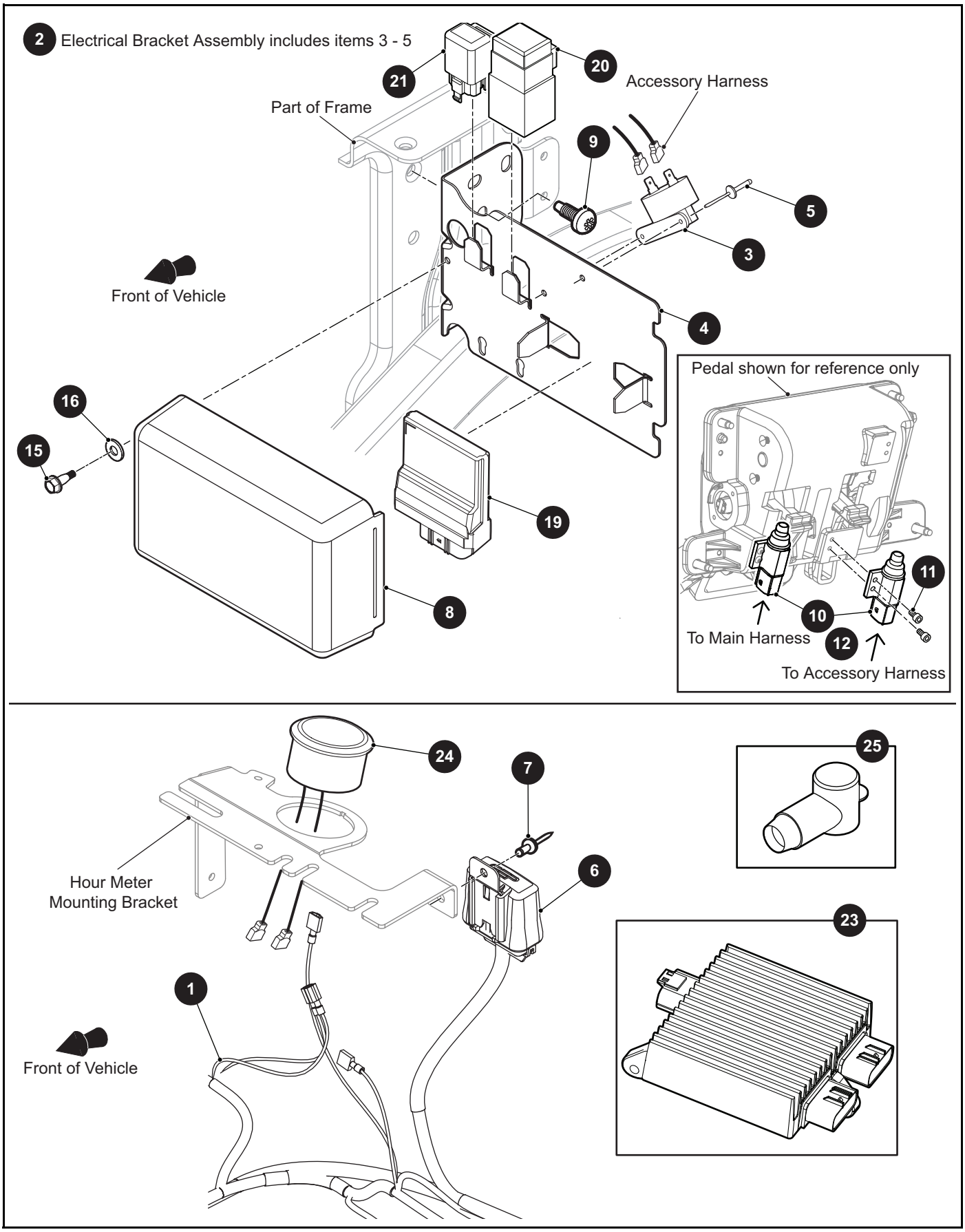
2 Electrical Bracket Assembly includes items 3 - 5
21
20
Accessory Harness
Part of Frame
9
5
3
Front of Vehicle
4
Pedal shown for reference only
16
15
19
11
10
To Main Harness
12
To Accessory Harness
8
24
7
25
Hour Meter
Mounting Bracket
6
23
1
Front of Vehicle

THE USE OF NON U.L. PARTS WILL VOID ANY U.L. LISTING.
When ordering parts, please specify the model and serial number of the product.
* Indicates a component that is not available as an individual part.
*** Indicates consult Customer Service Department for additional information.

ITEM	PART NO.	1 2 3 4 5 DESCRIPTION	QTY.
1	10043587	Main Harness	1
2	10006730	Electrical Bracket Assembly (Includes Items 3 - 5)	1
3	73290G03	Buzzer	1
4	683972	Bracket	1
5	71045G01	Black Aluminum Rivet, 5/32"	2
6	10043588	Accessory Harness (For Freedom & Shuttle 2+2)	1
7	71055G01	Rivet, 3/16" x .38" Lg (For Freedom & Shuttle 2+2)	1
8	684246	Compartment Cover	1
9	602572	Pan Head Taptite Bolt, M10 - 1.5 x 20mm Lg	1
10	612889	Pedal Switch (For Freedom)	2
11	620030	Socket Head Bolt, M5 - .8 x 15mm Lg (For Freedom)	2
12	612889	Pedal Switch (For Fleet & Shuttle 2+2)	1
13			
14			
15	01038G01	Hex Washer Head Swageform Screw with Dog Point, 1/4" - 20 x 3/4" Lg	1
16	01110G01	Flat Washer, 1/4"	1
17			
18	17618G1	Nylon Clamp, 8" Lg (Not Illustrated)	3
19	684128	Electronic Control Unit (ECU)	1
20	684136	Ignition Relay	1
21	684135	Fuel Pump Relay	1
22			
23	10017118	Controller	1
24	617074	Hour Meter	1
25	840177	Terminal Boot	2

FOR FREEDOM & SHUTTLE 2+2 ONLY

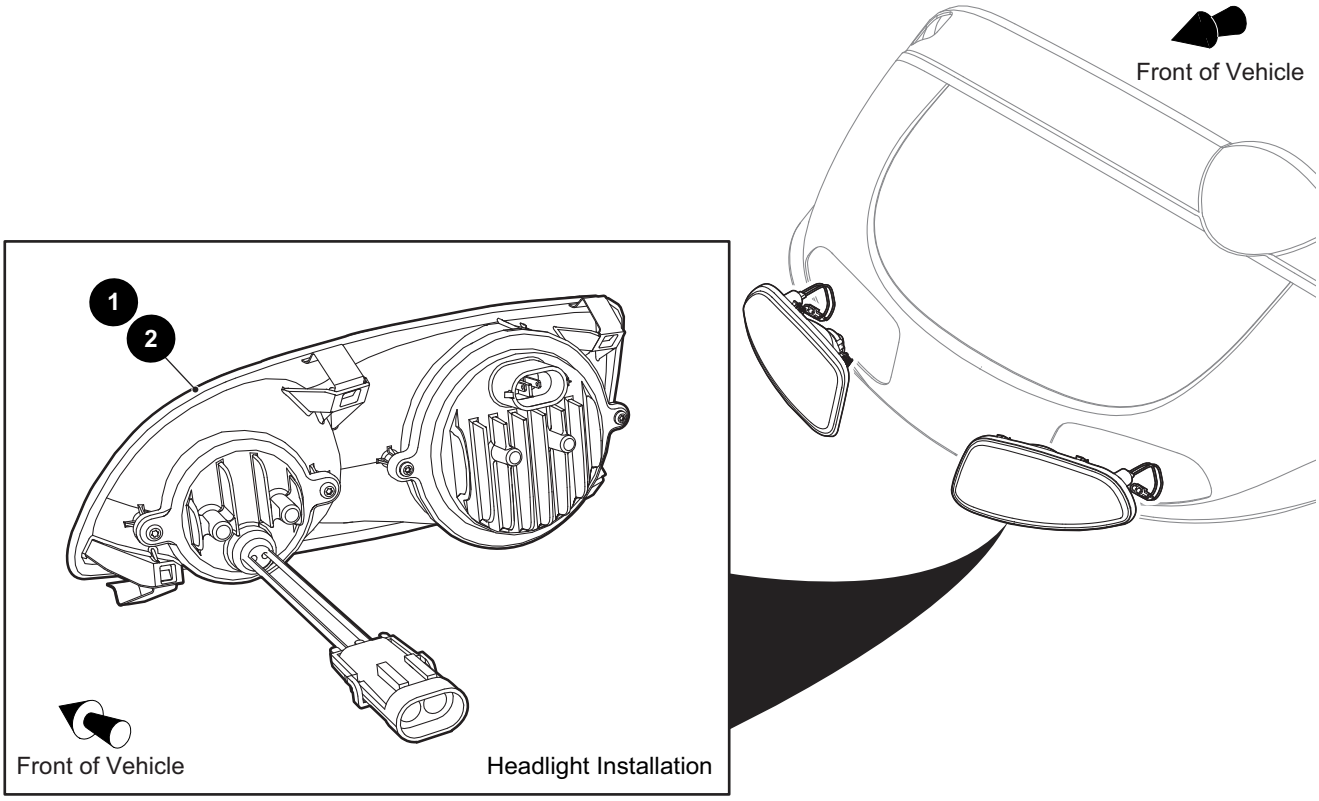

4 LED Taillight Assembly (Driver Side) includes items 6, 8 - 10

5 LED Taillight Assembly (Passenger Side) includes items 7 - 10

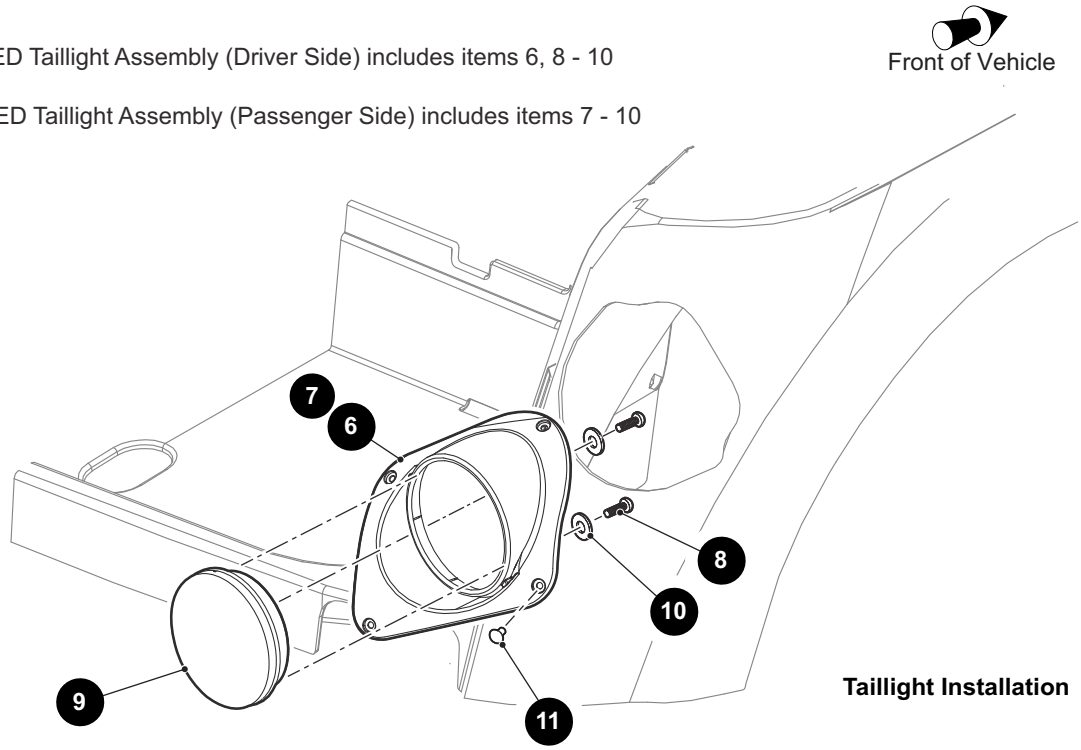

Taillight Installation

THE USE OF NON U.L. PARTS WILL VOID ANY U.L. LISTING.
When ordering parts, please specify the model and serial number of the product.
* Indicates a component that is not available as an individual part.
*** Indicates consult Customer Service Department for additional information.

ITEM	PART NO.	1 2 3 4 5 DESCRIPTION	QTY.
1	10030334G01	LED Headlight Assembly (Driver Side)	1
2	10030334G02	LED Headlight Assembly (Passenger Side)	1
3			
4	10030401G01	LED Taillight Assembly (Driver Side) (Includes Items 6, 8 - 10)	1
5	10030401G02	LED Taillight Assembly (Passenger Side) (Includes Items 7 - 10)	1
6	10027806G01	Bezel (Driver Side)	1
7	10027806G02	Bezel (Passenger Side)	1
8	10023082	Button Head Torx Screw (Plastite), M3 - 8	3
9	10014910	Round LED Taillight, 4"	1
10	10027443	Flat Washer, #4 - 7/16”	3
11	10030163	Button Head Torx Screw (Plastite), #10 - 16 x 3/8" Lg	8

FOR FREEDOM & SHUTTLE 2+2

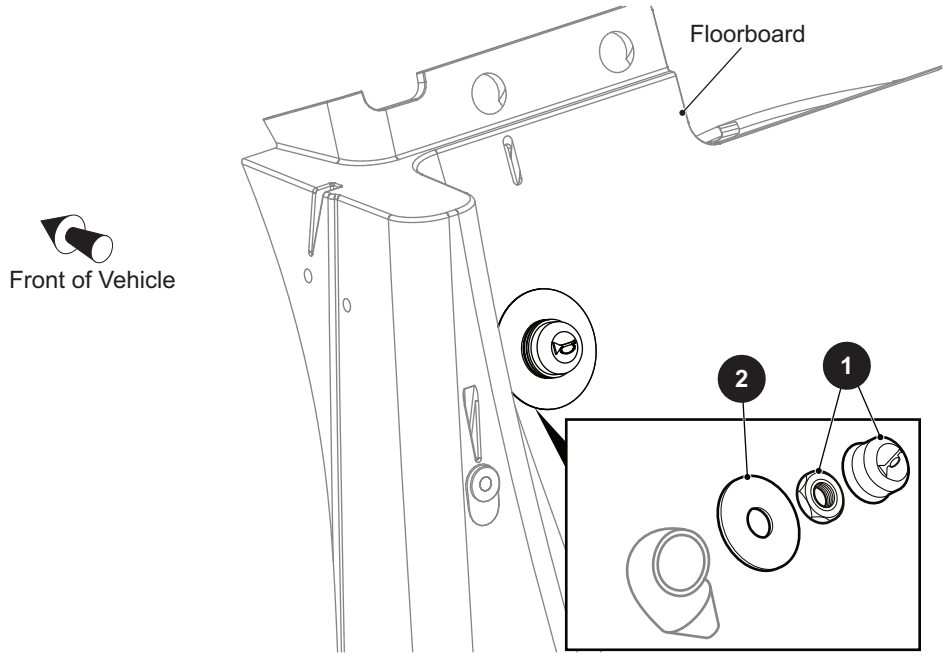

Momentary Switch Installation

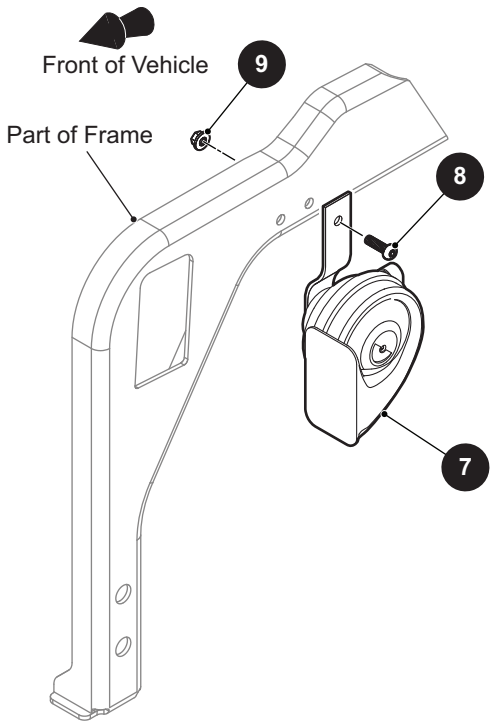

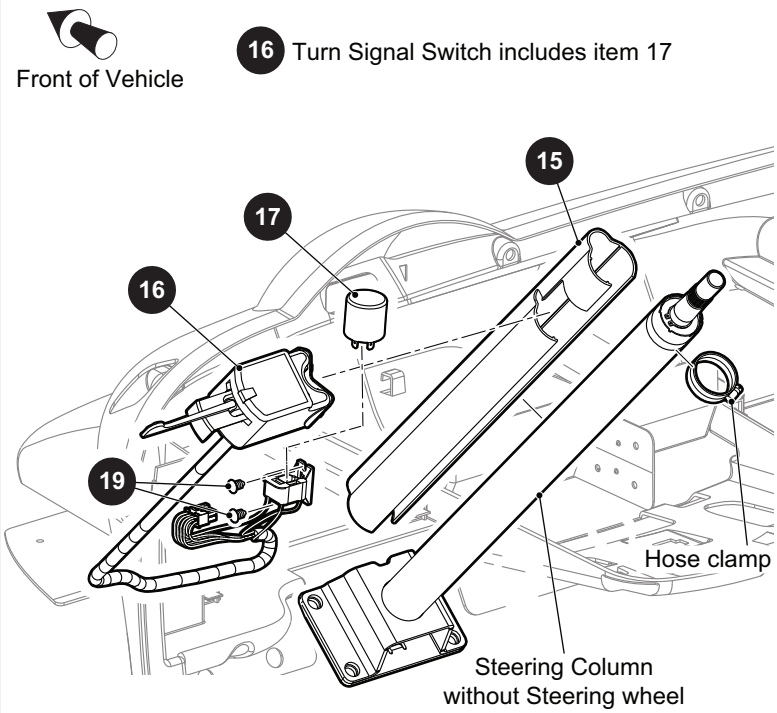

THE USE OF NON U.L. PARTS WILL VOID ANY U.L. LISTING.
When ordering parts, please specify the model and serial number of the product.
* Indicates a component that is not available as an individual part.
*** Indicates consult Customer Service Department for additional information.

ITEM	PART NO.	1 2 3 4 5 DESCRIPTION	QTY.
1	17318G1	Momentary Switch	1
2	608397	Horn Plate	1
3			
4			
5			
6			
7	604196	Horn Assembly	1
8	601326	Button Head Torx Bolt, M6 - 1 x 20mm Lg	1
9	601476	Flanged Lock Nut, M6 - 1	1
10			
11			
12			
13			
14			
15	20965G3	Steering Column Cover	1
16	604511	Turn Signal Switch (Includes Item 17)	1
17	604367	Flasher Unit	1
18	*	Vinyl Tape, 40mm (Not Illustrated)	1
19	16816G5	Ratchet Rivet, .187" x .550"	2
20	31539G1	Nylon Clamp, 15.5" Lg (Not Illustrated)	1

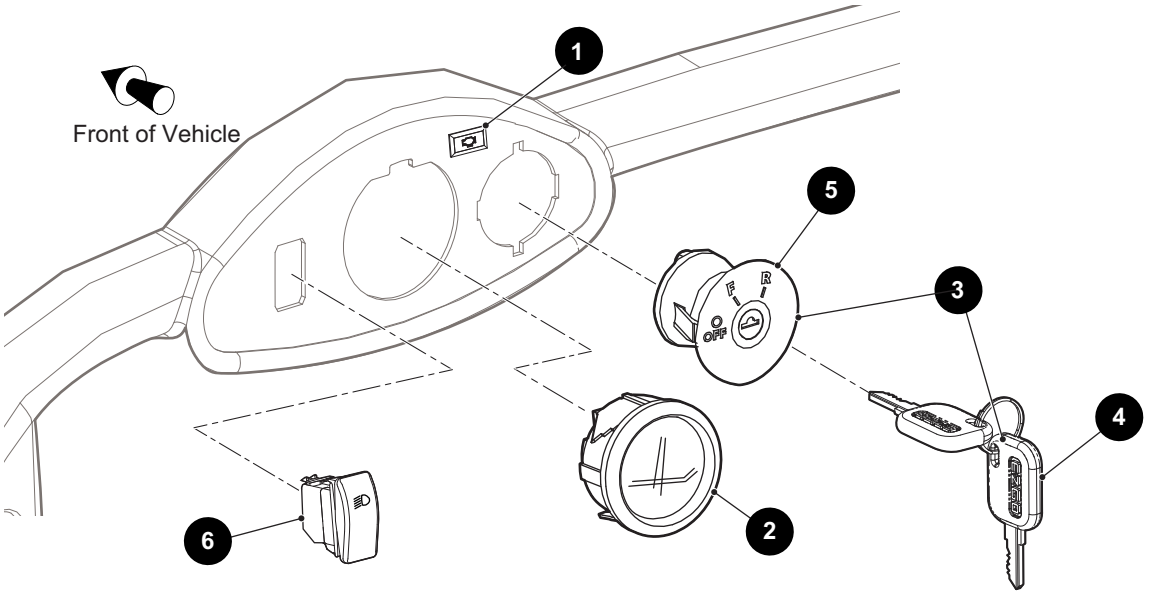

BATTERY SIDE POST

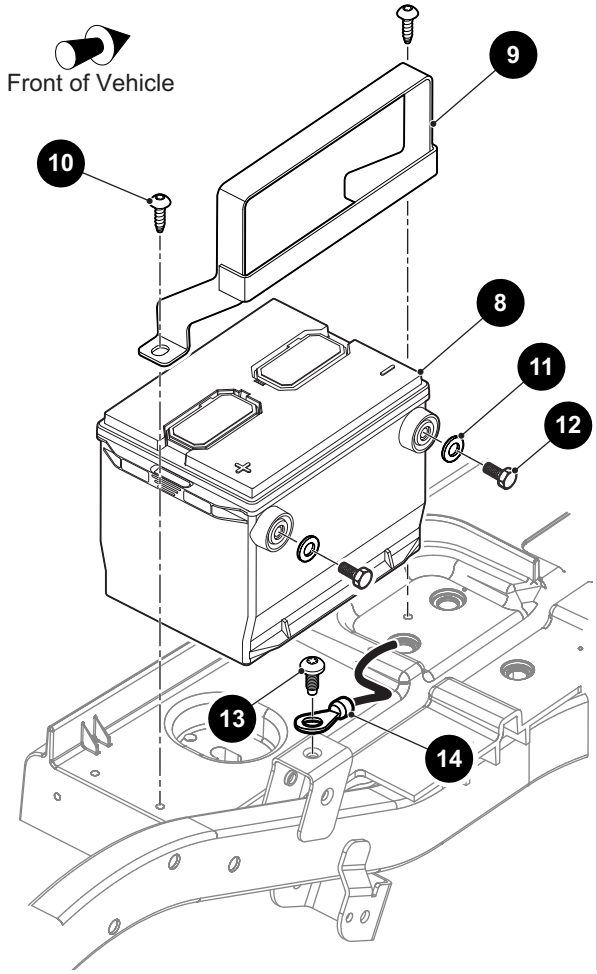

BATTERY TOP POST

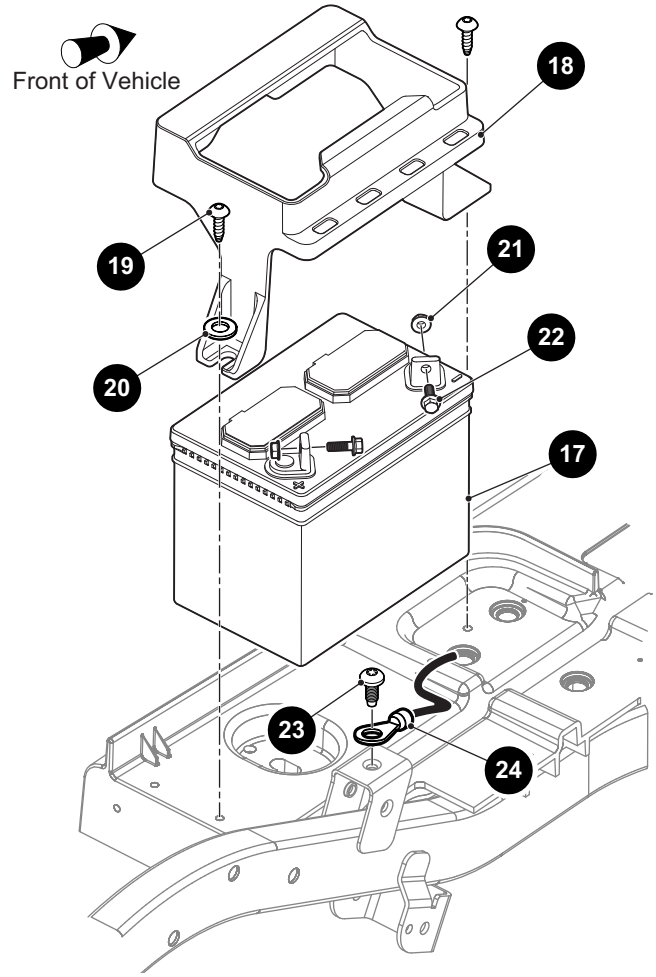

THE USE OF NON U.L. PARTS WILL VOID ANY U.L. LISTING.
When ordering parts, please specify the model and serial number of the product.
* Indicates a component that is not available as an individual part.
*** Indicates consult Customer Service Department for additional information.

ITEM	PART NO.	1 2 3 4 5 DESCRIPTION	QTY.
1	659101	Malfunction Indicator Light	1
2	612314	State of Charge Meter (Fuel)	1
3	609696	Key Switch and Key Set (Unique)	1
4	611282	Common Key Set	1
5	611284	Key Switch	1
6	651897G07	Headlight Switch (For Freedom & Shuttle 2+2 Only)	1
7			
8	637484	Battery, 12V (Side Post)	1
9	643145	Battery Tie Down	1
10	649804	Button Head Torx Screw, M8 - 3.5 x 30mm Lg	2
11	614221	Flat Washer, 3/8"	2
12	651336	Battery Bolt (Side Terminal)	2
13	602572	Pan Head Taptite Bolt, M10 - 1.5 x 20mm Lg	1
14	687925	Power Harness (Connects to Starter Generator Controller)	1
15			
16			
17	680408	Battery, 12V (Top Post)	1
18	680409	Battery Tie Down	1
19	649804	Button Head Torx Screw, M8 - 3.5 x 30mm Lg	2
20	614221	Flat Washer, 3/8"	2
21	11027G2	Flanged Lock Nut, 1/4" - 20	2
22	13437G9	Flanged Lock Screw (Serrated), 1/4" - 20 x 3/4" Lg, Grade 5	2
23	602572	Pan Head Taptite Bolt, M10 - 1.5 x 20mm Lg	1
24	687925	Power Harness (Connects to Starter Generator Controller)	1
25			
26			
27	608772	#6AWG Wire, Blue (For CE Vehicles) (Not Illustrated)	1
28	606042	Battery Terminal Cover (For CE Vehicles) (Not Illustrated)	1

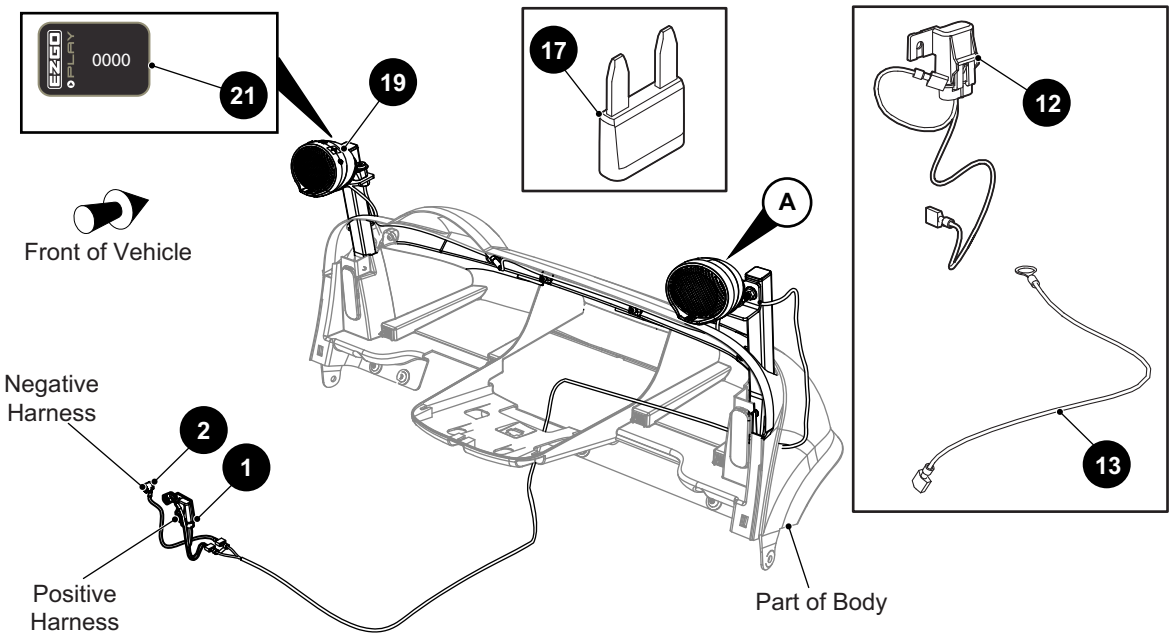

3 Speaker Assembly Mounting, Driver Side includes items 5, 7 - 11

4 Speaker Assembly Mounting, Passenger Side includes items 6 - 11

18 Bluetooth Speakers Assembly includes items 19 - 21

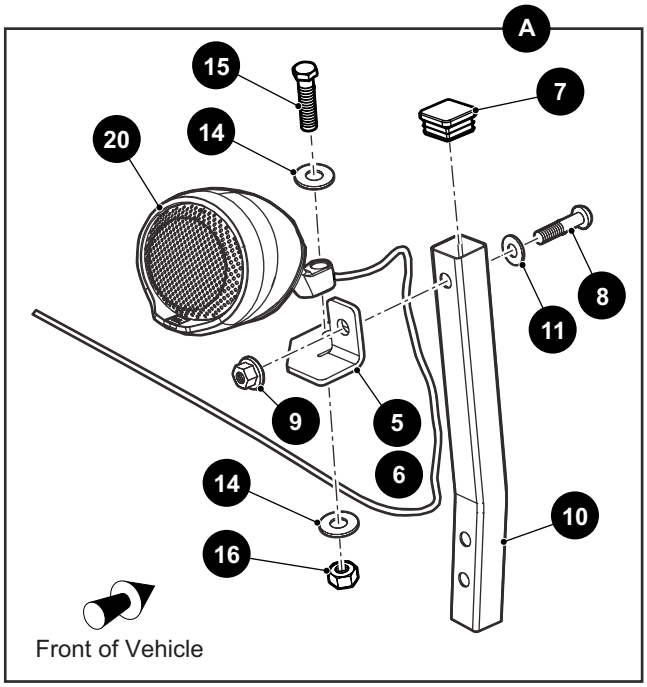

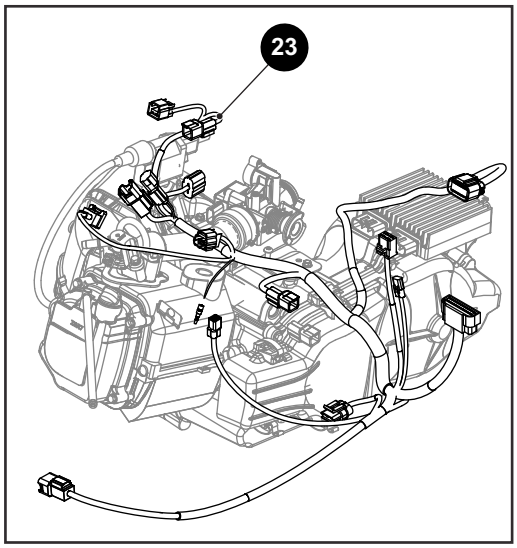

THE USE OF NON U.L. PARTS WILL VOID ANY U.L. LISTING.
When ordering parts, please specify the model and serial number of the product.
* Indicates a component that is not available as an individual part.
*** Indicates consult Customer Service Department for additional information.

ITEM	PART NO.	1 2 3 4 5 DESCRIPTION	QTY.
1	697532	Speaker Harness (Positive)	1
2	697533	Speaker Harness (Negative)	1
3	697232	Speaker Assembly Mounting, Driver Side (Includes Items 5, 7 - 11)	1
4	697231	Speaker Assembly Mounting, Passenger Side (Includes Items 6 - 11)	1
5	690335G01	Speaker Bracket (Driver Side)	1
6	690335G02	Speaker Bracket (Passenger Side)	1
7	620634	End Cap	1
8	600527	Button Head Torx Bolt, M10 - 1.5 x 60mm Lg	1
9	600525	Lock Nut, M10 - 1.5	1
10	648473	Front Mirror Mount Strut	1
11	603823	Flat Washer, M10	1
12	10001424	Speaker Jumper Harness (Positive)	1
13	10001784	Speaker Jumper Harness (Negative)	1
14	00560G2	Flat Washer, 7/16"	4
15	00463G11	Hex Head Bolt, 7/16" - 14 x 1 5/8" Lg, Grade 5	2
16	00734G1	Lock Nut, 7/16" - 14	2
17	636455G20	Mini Fuse Automotive, 58V, 5A	1
18	692171	Bluetooth Speakers Assembly (Includes Items 19 - 21)	1
19	690350	Bluetooth Speaker (Parent)	1
20	692906	Bluetooth Speaker (Child)	1
21	692795	Bluetooth Speaker Decal	1
22	00753G7	Truss Head Phillip Screw, 1/4" - 20 x 2 1/2" Lg (Not Illustrated)	2
23	687926	Engine Harness	1

1 USB Port Housing Assembly includes items 2 - 3

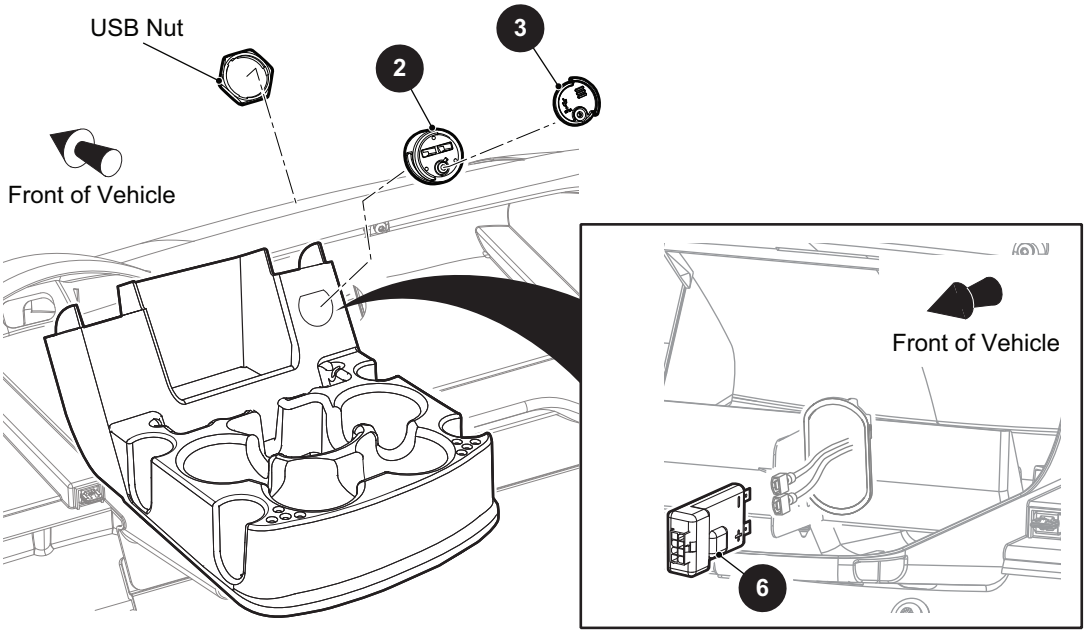

THE USE OF NON U.L. PARTS WILL VOID ANY U.L. LISTING.
When ordering parts, please specify the model and serial number of the product.
* Indicates a component that is not available as an individual part.
*** Indicates consult Customer Service Department for additional information.

ITEM	PART NO.	1 2 3 4 5 DESCRIPTION	QTY.
1	639384	USB Port Housing Assembly (Includes Items 2 - 3)	1
2	639383	USB Port Housing	1
3	639382	USB Port Lid	1
4			
5	17618G1	Nylon Clamp, 7” Lg (Not Illustrated)	1
6	10001356	USB Electronics	1
7			
8			
		ITEMS 9 TO 44 NOT SHOWN (FOR FLEET & FREEDOM ONLY)	
9	10008835G07124	GPS Display Unit, 7", Base, 24 Months Lease Duration	1
10	10008835G07130	GPS Display Unit, 7", Base, 30 Months Lease Duration	1
11	10008835G07136	GPS Display Unit, 7", Base, 36 Months Lease Duration	1
12	10008835G07142	GPS Display Unit, 7", Base, 42 Months Lease Duration	1
13	10008835G07148	GPS Display Unit, 7", Base, 48 Months Lease Duration	1
14	10008835G07154	GPS Display Unit, 7", Base, 54 Months Lease Duration	1
15	10008835G07160	GPS Display Unit, 7", Base, 60 Months Lease Duration	1
16	10008835G07166	GPS Display Unit, 7", Base, 66 Months Lease Duration	1
17	10008835G07172	GPS Display Unit, 7", Base, 72 Months Lease Duration	1
18	10008835G07224	GPS Display Unit, 7", Enhanced, 24 Months Lease Duration	1
19	10008835G07230	GPS Display Unit, 7", Enhanced, 30 Months Lease Duration	1
20	10008835G07236	GPS Display Unit, 7", Enhanced, 36 Months Lease Duration	1
21	10008835G07242	GPS Display Unit, 7", Enhanced, 42 Months Lease Duration	1
22	10008835G07248	GPS Display Unit, 7", Enhanced, 48 Months Lease Duration	1
23	10008835G07254	GPS Display Unit, 7", Enhanced, 54 Months Lease Duration	1
24	10008835G07260	GPS Display Unit, 7", Enhanced, 60 Months Lease Duration	1
25	10008835G07266	GPS Display Unit, 7", Enhanced, 66 Months Lease Duration	1
26	10008835G07272	GPS Display Unit, 7", Enhanced, 72 Months Lease Duration	1
27	10008835G10124	GPS Display Unit, 10", Base, 24 Months Lease Duration	1
28	10008835G10130	GPS Display Unit, 10", Base, 30 Months Lease Duration	1
29	10008835G10136	GPS Display Unit, 10", Base, 36 Months Lease Duration	1

THE USE OF NON U.L. PARTS WILL VOID ANY U.L. LISTING.
When ordering parts, please specify the model and serial number of the product.
* Indicates a component that is not available as an individual part.
*** Indicates consult Customer Service Department for additional information.

ITEM	PART NO.	1 2 3 4 5 DESCRIPTION	QTY.
30	10008835G10142	GPS Display Unit, 10", Base, 42 Months Lease Duration	1
31	10008835G10148	GPS Display Unit, 10", Base, 48 Months Lease Duration	1
32	10008835G10154	GPS Display Unit, 10", Base, 54 Months Lease Duration	1
33	10008835G10160	GPS Display Unit, 10", Base, 60 Months Lease Duration	1
34	10008835G10166	GPS Display Unit, 10", Base, 66 Months Lease Duration	1
35	10008835G10172	GPS Display Unit, 10", Base, 72 Months Lease Duration	1
36	10008835G10224	GPS Display Unit, 10", Enhanced, 24 Months Lease Duration	1
37	10008835G10230	GPS Display Unit, 10", Enhanced, 30 Months Lease Duration	1
38	10008835G10236	GPS Display Unit, 10", Enhanced, 36 Months Lease Duration	1
39	10008835G10242	GPS Display Unit, 10", Enhanced, 42 Months Lease Duration	1
40	10008835G10248	GPS Display Unit, 10", Enhanced, 48 Months Lease Duration	1
41	10008835G10254	GPS Display Unit, 10", Enhanced, 54 Months Lease Duration	1
42	10008835G10260	GPS Display Unit, 10", Enhanced, 60 Months Lease Duration	1
43	10008835G10266	GPS Display Unit, 10", Enhanced, 66 Months Lease Duration	1
44	10008835G10272	GPS Display Unit, 10", Enhanced, 72 Months Lease Duration	1

Notes:

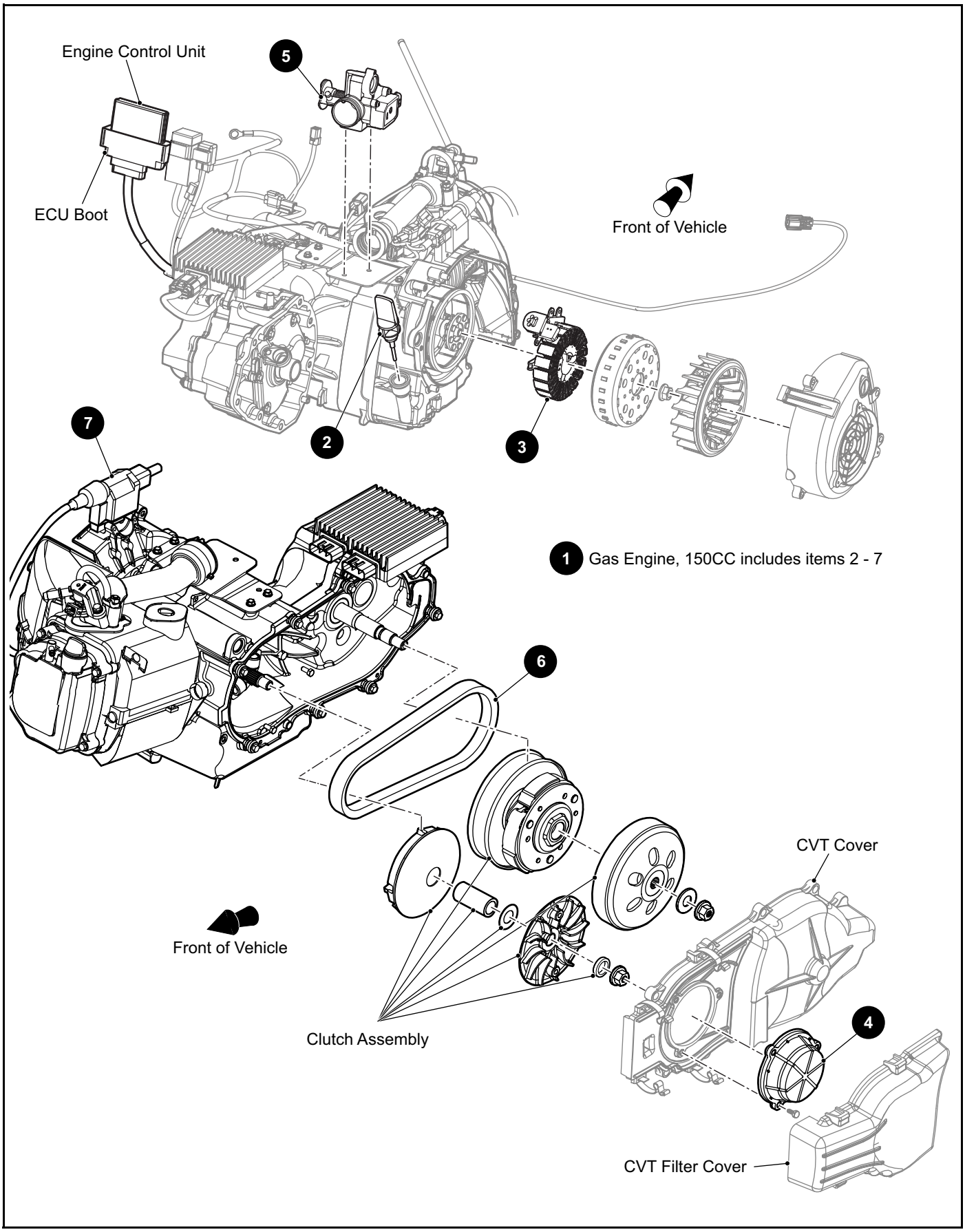
Engine Control Unit
5
ECU Boot
Front of Vehicle
7
2
3
1 Gas Engine, 150CC includes items 2 - 7
6
CVT Cover
Front of Vehicle
Clutch Assembly
4
CVT Filter Cover

THE USE OF NON U.L. PARTS WILL VOID ANY U.L. LISTING.
When ordering parts, please specify the model and serial number of the product.
* Indicates a component that is not available as an individual part.
*** Indicates consult Customer Service Department for additional information.

ITEM	PART NO.	1 2 3 4 5 DESCRIPTION	QTY.
1	680364	Gas Engine, 150CC (Includes Items 2 - 7)	1
2	696012	Dip Stick	1
3	696523	Stator	1
4	696008	CVT Filter	1
5	680380	Throttle Body	1
6	696533	CVT Belt	1
7	680379	Ignition Coil	1

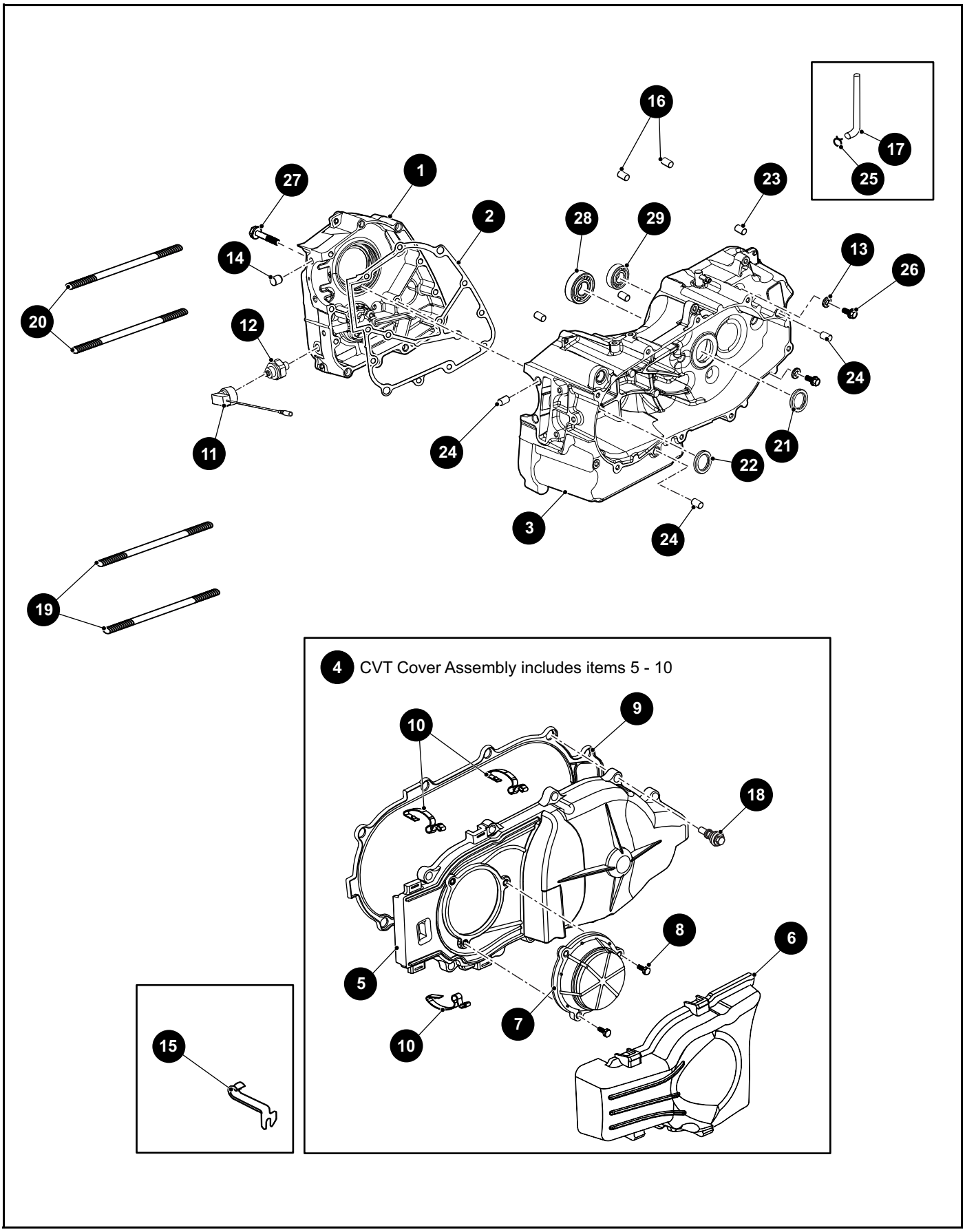
16
17
25
27
1
23
2
28
29
14
13
26
20
12
24
11
24
21
22
3
24
19
4 CVT Cover Assembly includes items 5 - 10
9
10
18
8
6
5
7
10
15

THE USE OF NON U.L. PARTS WILL VOID ANY U.L. LISTING.
When ordering parts, please specify the model and serial number of the product.
* Indicates a component that is not available as an individual part.
*** Indicates consult Customer Service Department for additional information.

ITEM	PART NO.	1 2 3 4 5 DESCRIPTION	QTY.
1	696496	Mid Housing	1
2	696506	Housing Gasket, LH	1
3	696495	Housing, LH	1
4	10010618	CVT Cover Assembly (Includes Items 5 - 10)	1
5	696070	CVT Cover	1
6	696112	Filter Cover	1
7	696008	CVT Filter	1
8	697614	CVT Filter Screw	3
9	696010	CVT Cover Gasket	1
10	10007076	CVT Cover Clamp	4
11	10014869	Oil Pressure Switch Harness	1
12	696115	Oil Pressure Switch	1
13	10007634	Flat Washer	2
14	10009680	Cone Plug,6-7	1
15	10023139	Vent Hose Bracket	1
16	696486	Axle Interface Dowel	2
17	10014866	Gearbox Vent Tube	1
18	696483	CVT Screw	8
19	10014870	Cylinder Stud	2
20	10014871	Cylinder Stud	2
21	696020	Input Shaft Seal	1
22	696526	Oil Crank Seal, LH	1
23	10023138	Dowel, 10 x 14	2
24	696513	Dowel (Cylinder To Cylinder Head)	4
25	10014855	Breather Hose Spring Clip	1
26	10007635	Screw	2
27	697693	Screw, M6 - 1 x 50mm Lg	2
28	696530	Bearing, IS CVT Side	1
29	696527	Bearing, OS CVT Side	1

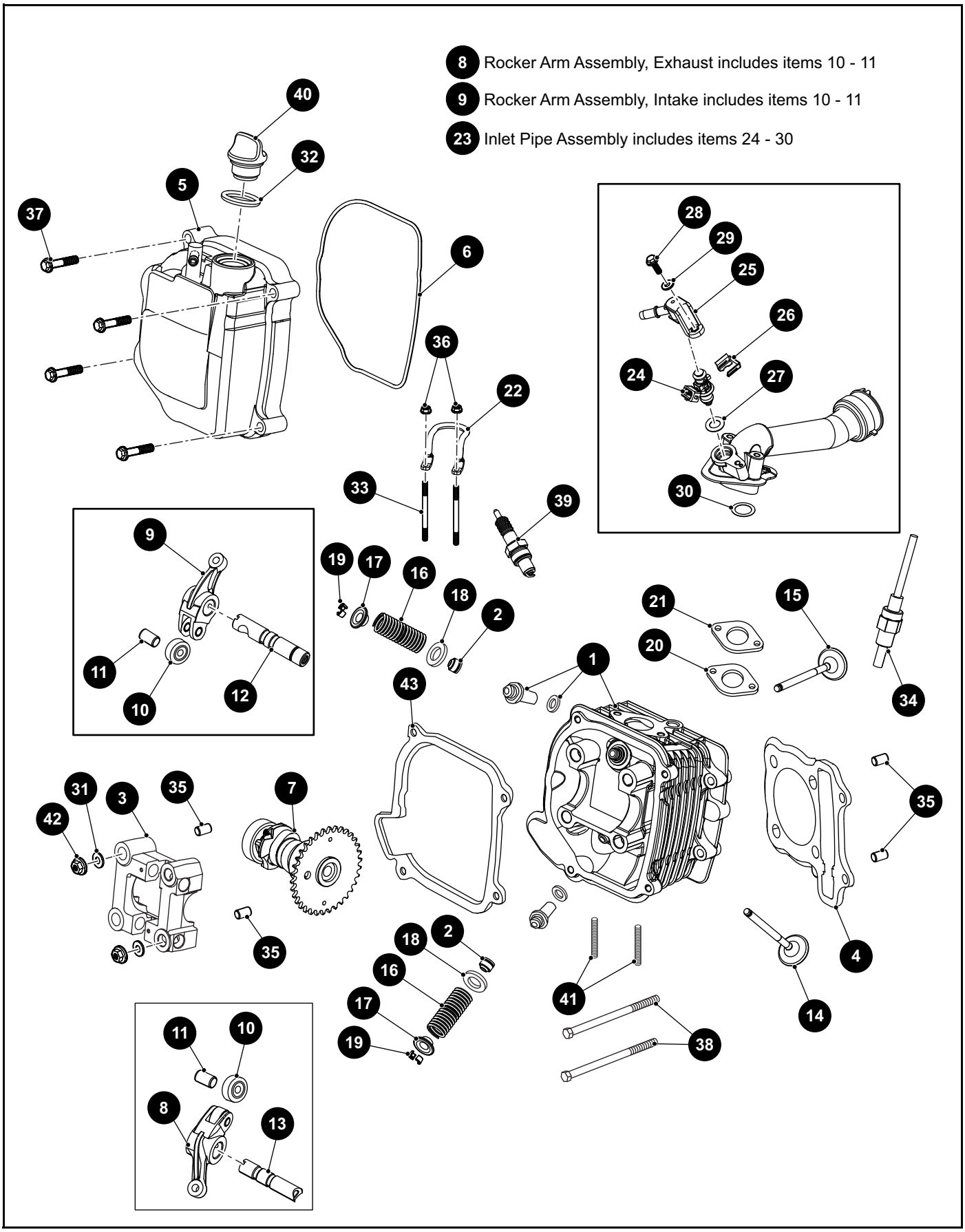
8 Rocker Arm Assembly, Exhaust includes items 10 - 11
9 Rocker Arm Assembly, Intake includes items 10 - 11
23 Inlet Pipe Assembly includes items 24 - 30
40
32
5
37
6
36
22
33
39
28
29
25
26
24
27
30
9
11
10
12
19
17
16
18
2
21
20
15
1
34
43
31
3
35
42
7
35
35
18
2
16
17
19
41
38
4
14
11
10
8
13

THE USE OF NON U.L. PARTS WILL VOID ANY U.L. LISTING.
When ordering parts, please specify the model and serial number of the product.
* Indicates a component that is not available as an individual part.
*** Indicates consult Customer Service Department for additional information.

ITEM	PART NO.	1 2 3 4 5 DESCRIPTION	QTY.
1	696454	Cylinder Head	1
2	696519	Valvetrain	2
3	696499	Cam Holder	1
4	10009692	Cylinder Head Gasket	1
5	696019	Valve Cover	1
6	10007108	Valve Cover Gasket	1
7	696521	Camshaft Assembly	1
8	697729	Rocker Arm Assembly, Exhaust (Includes Items 10 - 11)	1
9	696507	Rocker Arm Assembly, Intake (Includes Items 10 - 11)	1
10	10007109	Roller	1
11	10007110	Pin	1
12	696509	Shaft, Rocker Intake	1
13	696511	Shaft, Rocker Exhaust	1
14	696520	Exhaust Valve	1
15	696517	Intake Valve	1
16	696518	Valve Spring	2
17	696516	Valve Spring Retainer	2
18	10007111	Outer Valve Seat	2
19	696508	Valve Spring Retainer	4
20	10015659	Cylinder Head Gasket, Intake	1
21	680410	Inlet Pipe Spacer	1
22	10015844	Fuel Rail Guard	1
23	10015653	Inlet Pipe Assembly (Includes Items 24 - 30)	1
24	680393	Fuel Injector	1
25	680386	Fuel Rail	1
26	696498	Fuel Injector Clip	1
27	10007113	High Tension Seal (Fuel Injector)	1
28	10006993	Screw	1
29	10006991	Split Washer	1
30	10007118	O-Ring, 27mm, Intake	1
31	10010600	Washer, 8mm	4

ENGINE AND MUFFLER

THE USE OF NON U.L. PARTS WILL VOID ANY U.L. LISTING.
When ordering parts, please specify the model and serial number of the product.
* Indicates a component that is not available as an individual part.
*** Indicates consult Customer Service Department for additional information.

ITEM	PART NO.	1 2 3 4 5 DESCRIPTION	QTY.
32	10007119	O-Ring, 18mm, Dipstick	1
33	697615	Cylinder Head Stud, Intake	2
34	696452	Sensor, CHT	1
35	696513	Dowel (Cylinder to Cylinder Head)	4
36	10006956	Nut, M6 x 1	2
37	10015791	Screw, M6- 1 x 32mm Lg	4
38	697612	Screw, M6 - 1 x 100mm Lg	2
39	10024504	Spark Plug	1
40	696018	Oil Fill Cap	1
41	696688	Exhaust Stud	2
42	10010601	Flanged Nut, 8mm	4
43	10015654	Shroud/Head Seal	1

Notes:

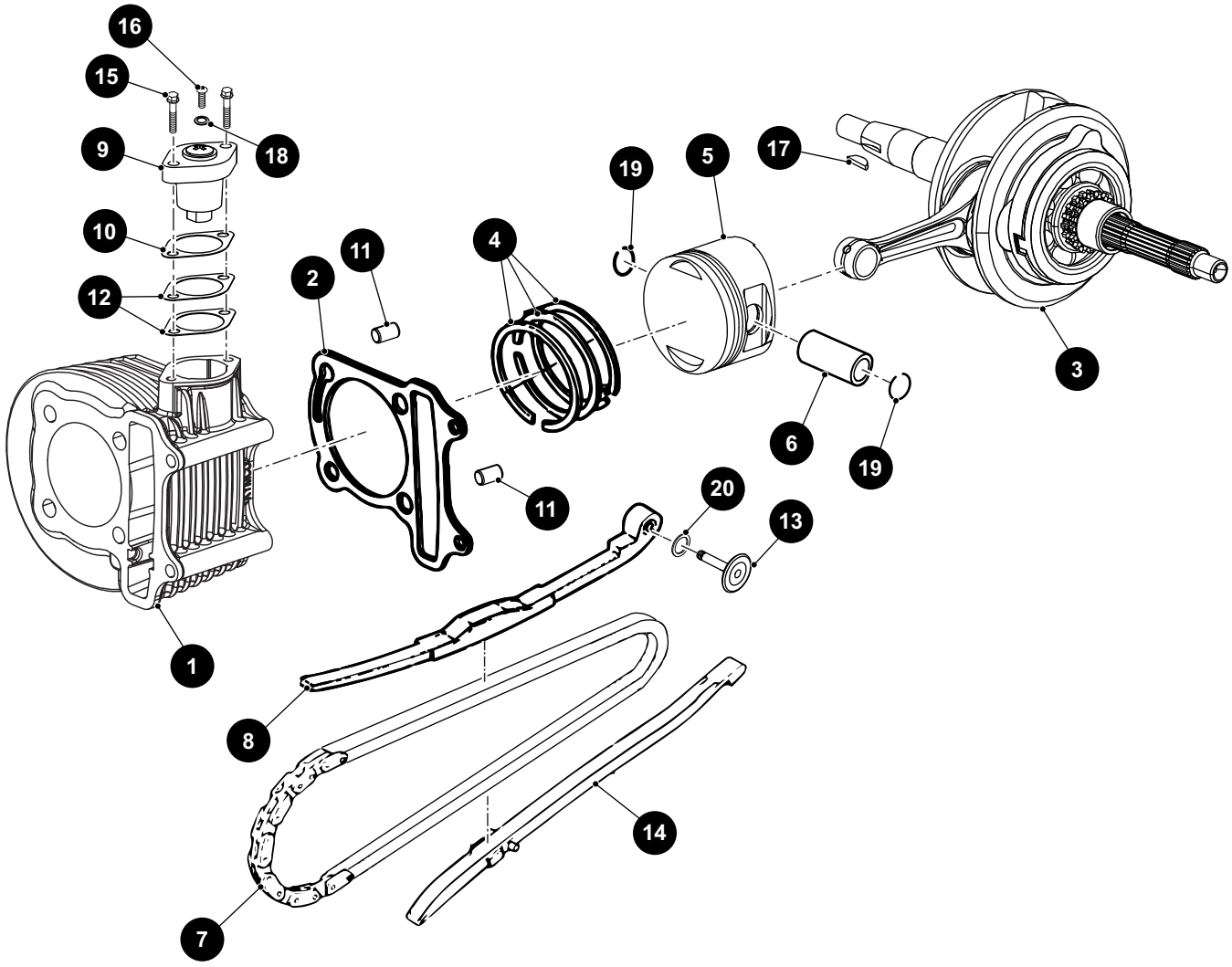
16
15
9
18
10
12
2
11
4
19
5
17
3
6
19
11
20
13
1
8
14
7

THE USE OF NON U.L. PARTS WILL VOID ANY U.L. LISTING.
When ordering parts, please specify the model and serial number of the product.
* Indicates a component that is not available as an individual part.
*** Indicates consult Customer Service Department for additional information.

ITEM	PART NO.	1 2 3 4 5 DESCRIPTION	QTY.
1	696487	Cylinder	1
2	10008266	Cylinder Gasket	1
3	696489	Crank Assembly	1
4	10008267	Piston Ring Assembly	1
5	696488	Piston	1
6	10010603	Piston Pin	1
7	10010608	Timing Chain	1
8	10010609	Upper Timing Chain Guide	1
9	696490	Timing Chain Tensioner	1
10	10010605	Timing Chain Tensioner Plate	1
11	696513	Dowel (Cylinder to Cylinder Head)	4
12	696491	Timing Chain Tensioner Gasket	1
13	10010610	Cam Chain Tensioner Pivot	1
14	10010611	Lower Timing Chain Guide	1
15	697716	Screw, M6 - 1 x 22mm Lg	2
16	10007120	Pan Head Screw	1
17	10010607	Woodruff Key, 25 x 14 x 4	1
18	10007121	Tensioner O-Ring	1
19	10010606	Piston Pin Clip,15mm	2
20	10010612	O-Ring, 15.2 x 1.5	1

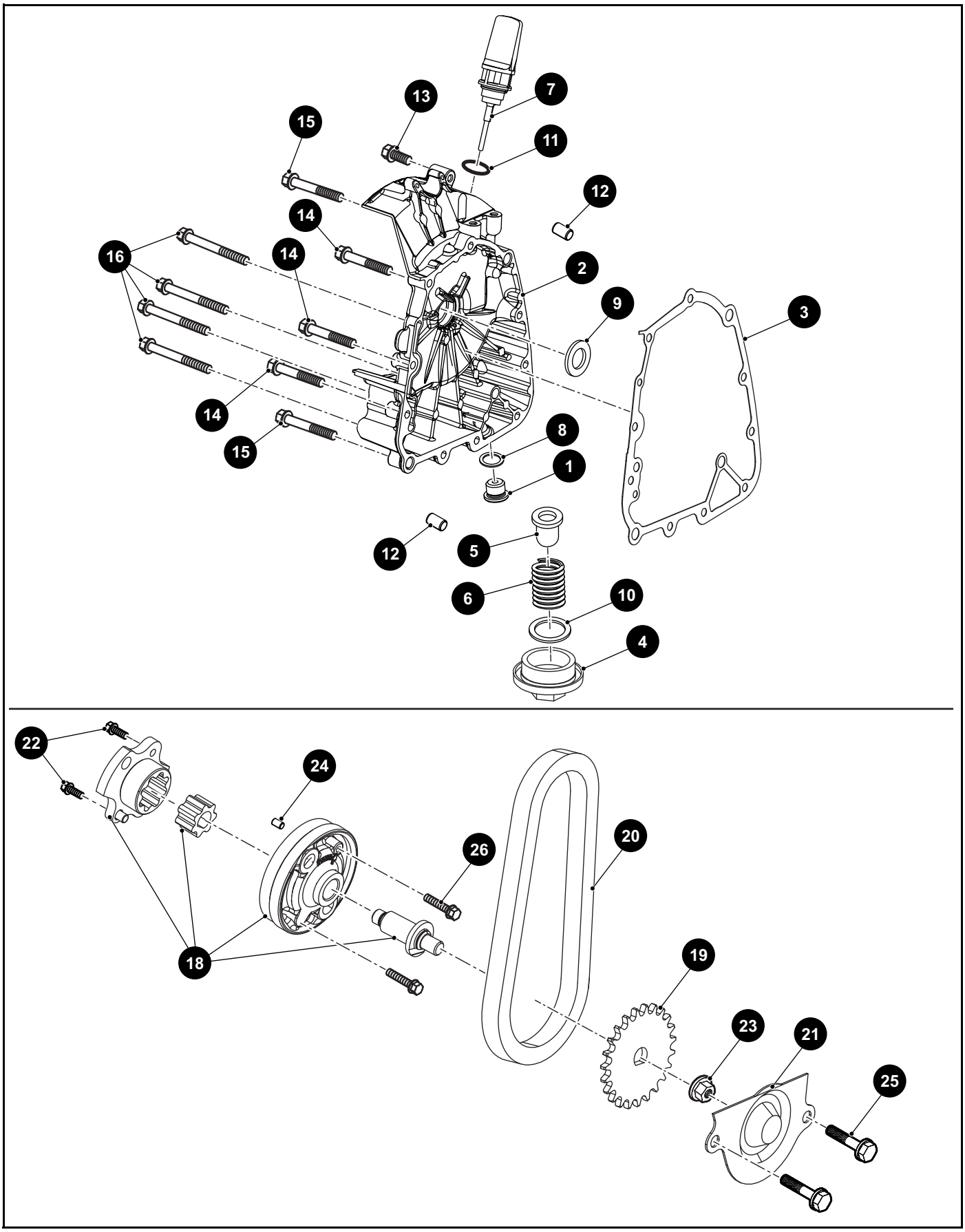
13
7
15
11
12
14
16
14
2
9
3
14
15
8
1
12
5
6
10
4
22
24
26
20
18
19
23
21
25

THE USE OF NON U.L. PARTS WILL VOID ANY U.L. LISTING.
When ordering parts, please specify the model and serial number of the product.
* Indicates a component that is not available as an individual part.
*** Indicates consult Customer Service Department for additional information.

ITEM	PART NO.	1 2 3 4 5 DESCRIPTION	QTY.
1	696463	Oil Drain Plug, Small	1
2	696494	RH Housing	1
3	696505	RH Housing Gasket	1
4	696014	Oil Drain Plug	1
5	10005159	Oil Screen	1
6	10010614	Oil Filter, Screen Spring	1
7	696012	Dip Stick	1
8	10010448	Oil Drain Plug Washer	1
9	10008268	Oil Seal	1
10	10010615	O-Ring, 30.8mm	1
11	10007119	Dipstick O-Ring, 18mm	1
12	696513	Dowel (Cylinder to Cylinder Head)	4
13	10015791	Screw, M6 - 1 x 32mm Lg	4
14	697610	Screw, M6 - 1 x 90mm Lg	5
15	697612	Screw, M6 - 1 x 100mm Lg	2
16	697609	Screw, M6 - 1 x 120mm Lg	4
17			
18	10015660	Oil Pump Assembly	1
19	696592	Oil Pump Gear	1
20	696591	Oil Pump Chain	1
21	696590	Oil Pump Cover	1
22	697727	Screw, M3 - 10mm	2
23	10006956	Nut, M6 x 1	2
24	10007143	Dowel Pin, 4 x 6.5	1
25	697611	Screw, M6 - 1 x 12mm Lg	4
26	697726	Screw, M6-1 x 28mm Lg	2

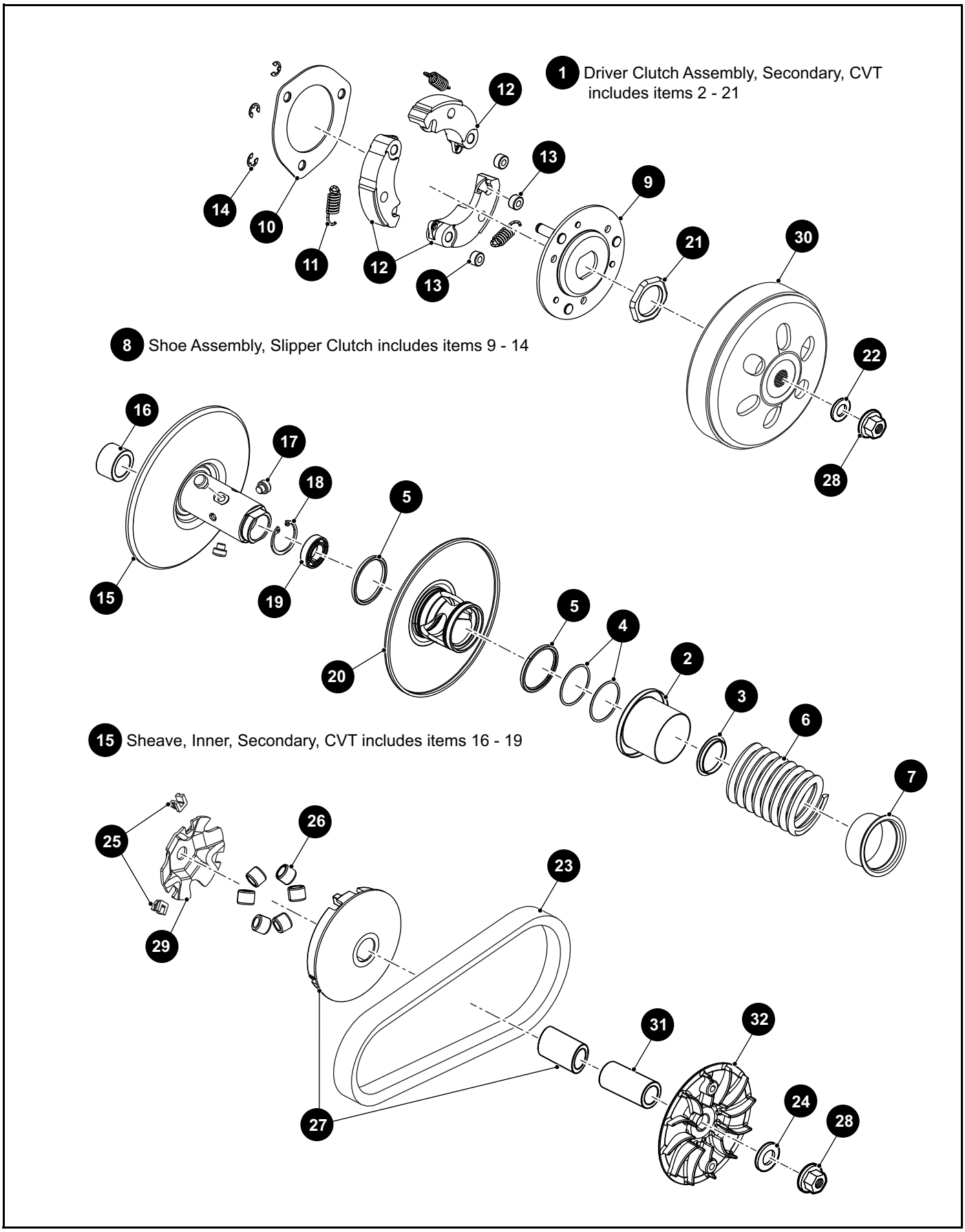
1 Driver Clutch Assembly, Secondary, CVT includes items 2 - 21
8 Shoe Assembly, Slipper Clutch includes items 9 - 14
15 Sheave, Inner, Secondary, CVT includes items 16 - 19
1
2
3
4
5
6
7
8
9
10
11
12
13
14
15
16
17
18
19
20
21
22
23
24
25
26
27
28
29
30
31
32

THE USE OF NON U.L. PARTS WILL VOID ANY U.L. LISTING.
When ordering parts, please specify the model and serial number of the product.
* Indicates a component that is not available as an individual part.
*** Indicates consult Customer Service Department for additional information.

ITEM	PART NO.	1 2 3 4 5 DESCRIPTION	QTY.
1	10029342	Driver Clutch Assembly, Secondary, CVT (Includes Items 2 - 21)	1
2	10007129	Collar Seal	1
3	10007134	Spring Collar, Inner	1
4	10007140	O-Ring,36.7mm	2
5	10007138	Oil Seal	2
6	10027249	Spring, Contra, Secondary	1
7	10007130	CVT Spring Collar, Outer	1
8	10009693	Shoe Assembly, Slipper Clutch (Includes Items 9 - 14)	1
9	696606	Shoe Plate, Front, CVT	1
10	696607	Shoe Plate, Rear, CVT	1
11	696602	CVT Shoe Spring	3
12	696600	CVT Shoe	3
13	10008270	Rubber Dampener, Clutch Shoe	3
14	696609	E-Clip	3
15	696605	Sheave, Inner, Secondary, CVT (Includes Items 16 - 19)	1
16	696604	Bearing, Rear	1
17	10030181	Torque Driver Roller Pin	1
18	10007141	Clip	1
19	10007137	Ball Bearing, Radial	1
20	10029339	Torque Driver Sheave, Ramp	1
21	696599	Nut	1
22	696532	Washer	1
23	696533	CVT Belt	1
24	696502	Spacer, Primary	1
25	696015	Slider Bushing	3
26	10023075	Roller Weight Set, 11g	1
27	696107	Sheave, In, Primary, CVT	1
28	696464	Nut	2
29	696108	Backing Plate	1
30	696007	Drum	1
31	696501	Primary Sleeve	1
32	697724	Primary Sheave Outer	1

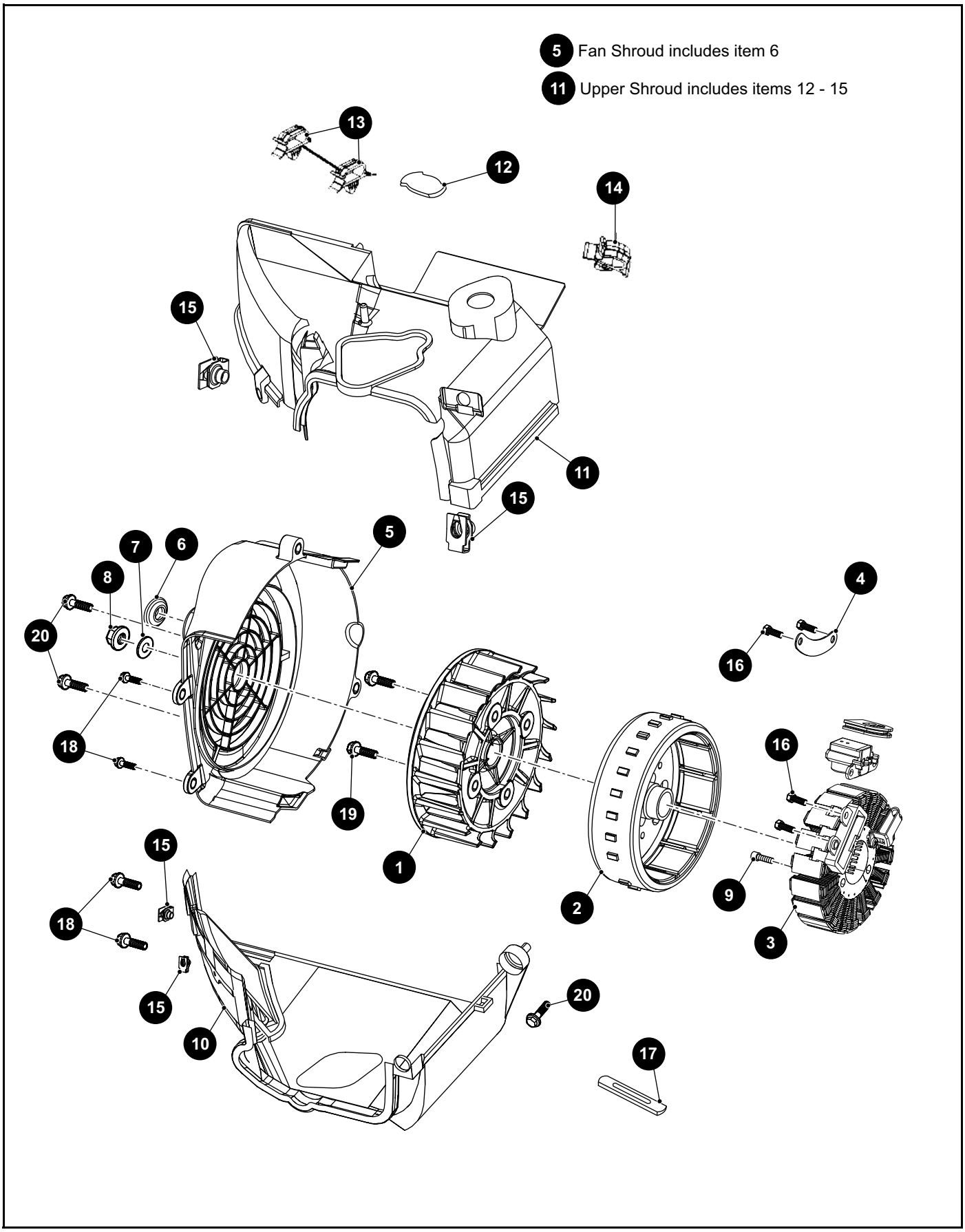
5 Fan Shroud includes item 6
11 Upper Shroud includes items 12 - 15
13
12
14
15
11
15
5
7
6
8
20
4
16
18
16
19
1
15
9
2
18
3
15
20
10
17

THE USE OF NON U.L. PARTS WILL VOID ANY U.L. LISTING.
When ordering parts, please specify the model and serial number of the product.
* Indicates a component that is not available as an individual part.
*** Indicates consult Customer Service Department for additional information.

ITEM	PART NO.	1 2 3 4 5 DESCRIPTION	QTY.
1	696003	Fan	1
2	696006	Rotor	1
3	696523	Stator	1
4	696522	Retainer Plate	1
5	696004	Fan Shroud (Includes Item 6)	1
6	10015684	Shroud Inlet Grommet	1
7	10015681	Plain Washer, 12mm	1
8	696464	Nut	2
9	10015680	Socket Bolt, 6 x 25	3
10	696117	Lower Shroud	1
11	696116	Upper Shroud (Includes Items 12 - 15)	1
12	10015687	Shroud Tensioner Grommet	1
13	10015688	Tube Clip	1
14	10015685	Wire Harness Clip	1
15	10015683	Clip Nut, 6mm	4
16	10015679	Pan Screw, 5 x 12	6
17	10015695	Flex Clip, 2 x 70	1
18	10015663	Flanged Bolt, 6 x 16	4
19	10015662	Flanged Bolt, 6 x 18	4
20	10015661	Flange Bolt, 6 x 25	3

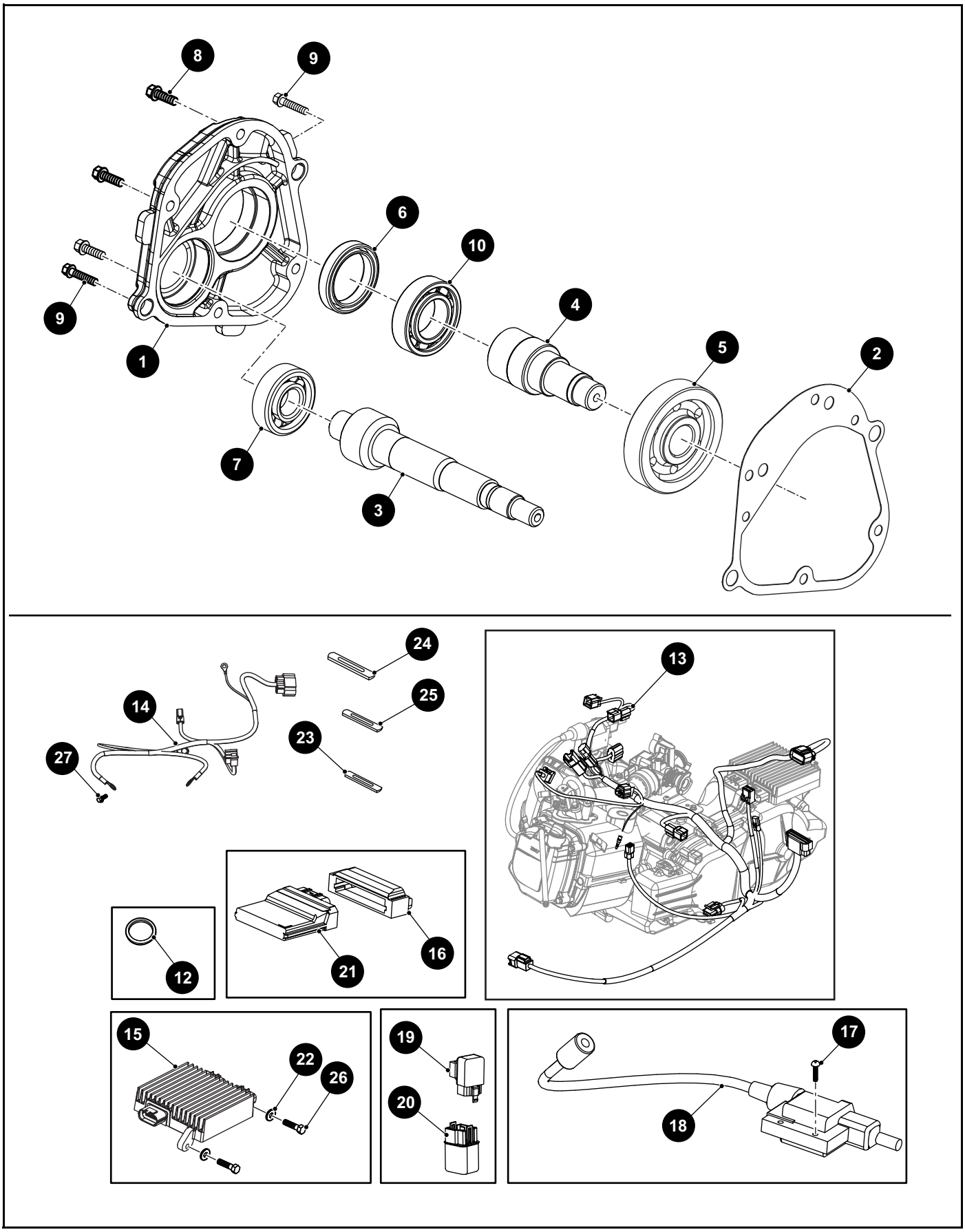
8
9
6
10
9
4
1
5
2
7
3
24
25
14
23
27
13
12
21
16
15
22
26
19
20
17
18

THE USE OF NON U.L. PARTS WILL VOID ANY U.L. LISTING.
When ordering parts, please specify the model and serial number of the product.
* Indicates a component that is not available as an individual part.
*** Indicates consult Customer Service Department for additional information.

ITEM	PART NO.	1 2 3 4 5 DESCRIPTION	QTY.
1	696113	Gearbox Cover	1
2	696114	Gearbox Cover Gasket	1
3	696109	Secondary CVT Shaft	1
4	696484	Output Shaft	1
5	696531	OS Gear	1
6	696485	Output Shaft Seal	1
7	696529	Bearing,IS Axle Side	1
8	10015790	Screw, M6- 1 x 22mm Lg	4
9	697726	Screw, M6-1 x 28mm Lg	2
10	696528	Bearing, OS Axle Side	1
11			
12	680371	Exhaust Ring Gasket	1
13	687926	Engine Harness	1
14	687925	Power Harness (Connects to Starter Generator Controller)	1
15	10017118	Controller	1
16	10001718	ECU Boot	1
17	10015692	Washer Bolt, 4 x 25	2
18	680379	Ignition Coil	1
19	684135	Fuel Pump Relay	1
20	684136	Ignition Relay	1
21	684128	Electronic Control Unit (ECU)	1
22	10006991	Split Washer	1
23	10015695	Flex Clip, 2 x 70	1
24	10015691	Flex Clip, 2 x 150	2
25	10015690	Flex Clip, 2 x 100	1
26	697608	Screw, M6 - 1 x 12mm Lg	2
27	697611	Screw, M6 - 1 x 12 Lg	4

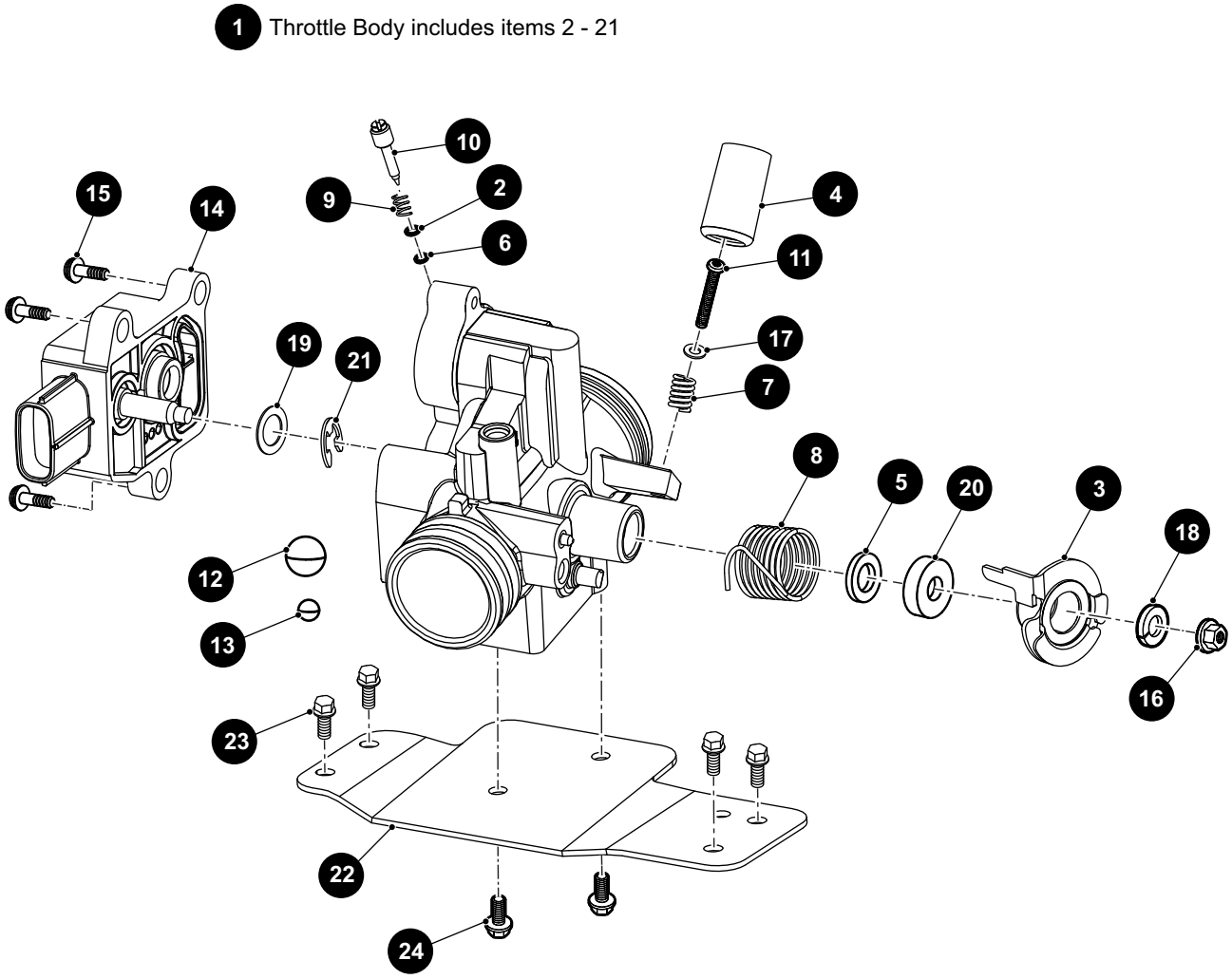
1 Throttle Body includes items 2 - 21
10
15
14
9
2
6
4
11
17
19
21
7
8
5
20
3
18
12
13
16
23
22
24

THE USE OF NON U.L. PARTS WILL VOID ANY U.L. LISTING.
When ordering parts, please specify the model and serial number of the product.
* Indicates a component that is not available as an individual part.
*** Indicates consult Customer Service Department for additional information.

ITEM	PART NO.	1 2 3 4 5 DESCRIPTION	QTY.
1	680380	Throttle Body (Includes Items 2 - 21)	1
2	10007147	Idle Adjust Screw Washer	1
3	10007146	Throttle Lever	1
4	10007150	Idle Screw Cover	1
5	10007151	Throttle Shaft Seal	1
6	10007152	O-Ring, Idle Screw	1
7	10007153	Adjust Screw Throttle Spring	2
8	10007154	Throttle Shaft Spring	1
9	10007155	Idle Adjust Screw Spring	1
10	10007156	ISC Adjust Screw	1
11	10007157	Throttle Adjust Screw	2
12	10007158	Throttle Ball, Large	1
13	10007159	Throttle Ball, Small	2
14	10007160	Throttle Sensor, TPS, TMAP	1
15	10007161	Screw, Washer, 4 x 14	3
16	10006956	Nut, M6 x 1	2
17	10007162	Plan Washer, 4mm	2
18	10006991	Split Washer	1
19	10007148	Washer	1
20	10007149	Throttle Body Washer	1
21	10007164	E-Clip, Throttle Shaft	1
22	696011	Throttle Body Plate	1
23	697611	Screw, M6 - 1 x 12mm Lg	4
24	10015689	Flanged Bolt, 6*16	2

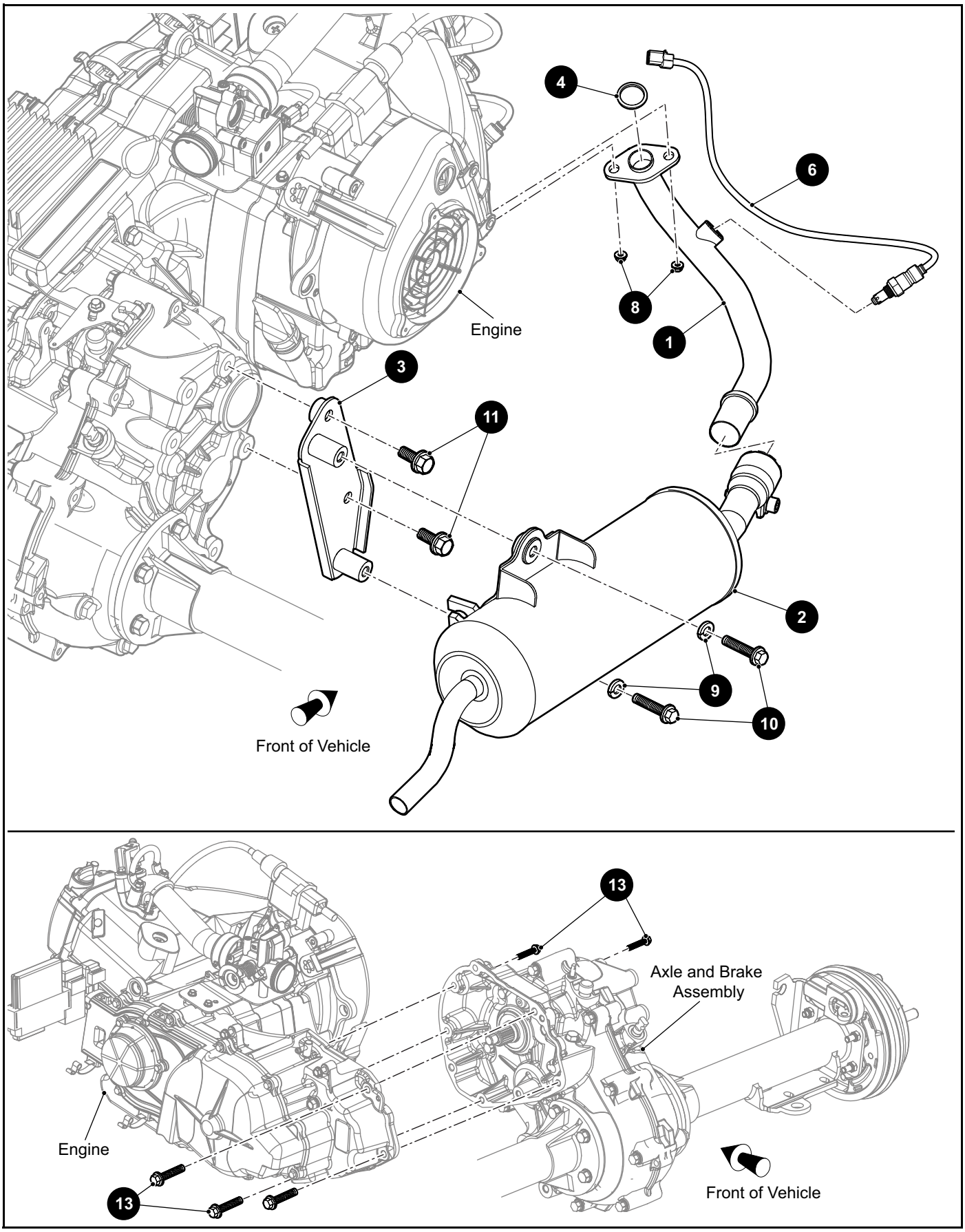
4
6
8
1
Engine
3
11
2
9
10
Front of Vehicle
13
Axle and Brake
Assembly
Engine
13
Front of Vehicle

THE USE OF NON U.L. PARTS WILL VOID ANY U.L. LISTING.
When ordering parts, please specify the model and serial number of the product.
* Indicates a component that is not available as an individual part.
*** Indicates consult Customer Service Department for additional information.

ITEM	PART NO.	1 2 3 4 5 DESCRIPTION	QTY.
1	680368	Exhaust Pipe	1
2	680367	Exhaust Muffler	1
3	680372	Exhaust Bracket	1
4	680371	Exhaust Gasket	1
5			
6	680373	Oxygen Sensor	1
7			
8	26830G01	Self Lock Nut, M8 - 1.25	2
9	616990	Split Lock Washer, 8mm	2
10	602330	Flanged Hex Head Bolt, M8 - 1.25 x 30mm Lg, Grade 8.8	2
11	10007023	Flanged Hex Head Bolt, M10 - 1.25 x 30mm Lg	2
12			
13	602330	Flanged Hex Head Bolt, M8 - 1.25 x 30mm Lg, Grade 8.8	6

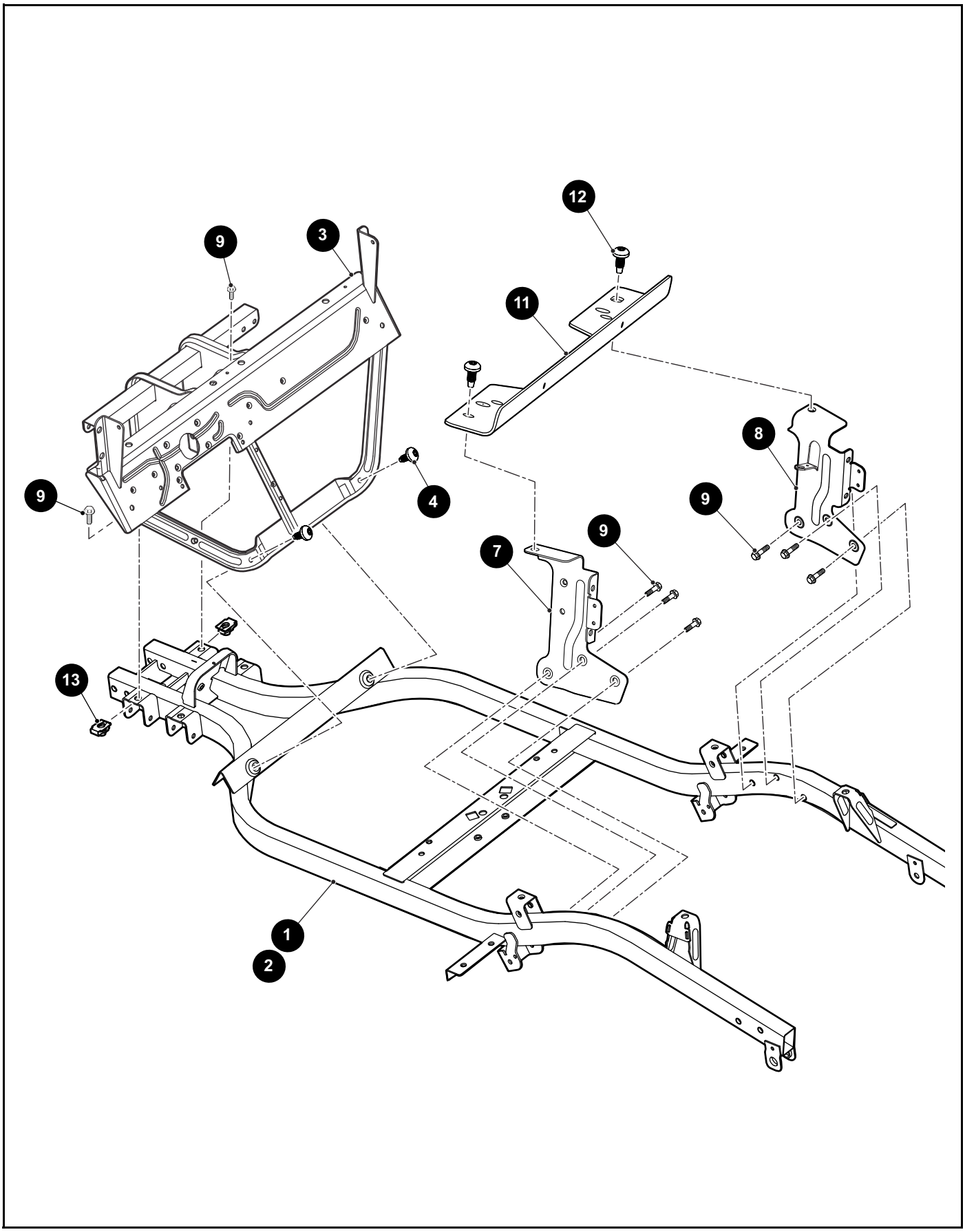
12
9
3
11
8
9
4
9
9
7
13
1
2

THE USE OF NON U.L. PARTS WILL VOID ANY U.L. LISTING.
When ordering parts, please specify the model and serial number of the product.
* Indicates a component that is not available as an individual part.
*** Indicates consult Customer Service Department for additional information.

ITEM	PART NO.	1 2 3 4 5 DESCRIPTION	QTY.
1	10014468G03	Frame Weldment, E/Coat & P/Coat	1
2	10014468G04	Frame Weldment, P/Coat	1
3	690541	IP Support Weldment	1
4	602572	Pan Head Tapite Bolt, M10 - 1.5 x 20mm Lg	2
5			
6			
7	600218	Seat Support Bracket (Driver Side)	1
8	613187	Seat Support Bracket (Passenger Side)	1
9	603799	Flanged Hex Head Bolt, M10 - 1.5 x 25mm Lg	8
10			
11	601275	Seat Support Brace	1
12	602572	Pan Head Tapite Bolt, M10 - 1.5 x 20mm Lg	2
13	603818	Barrel Clip, M10 - 1.5	2

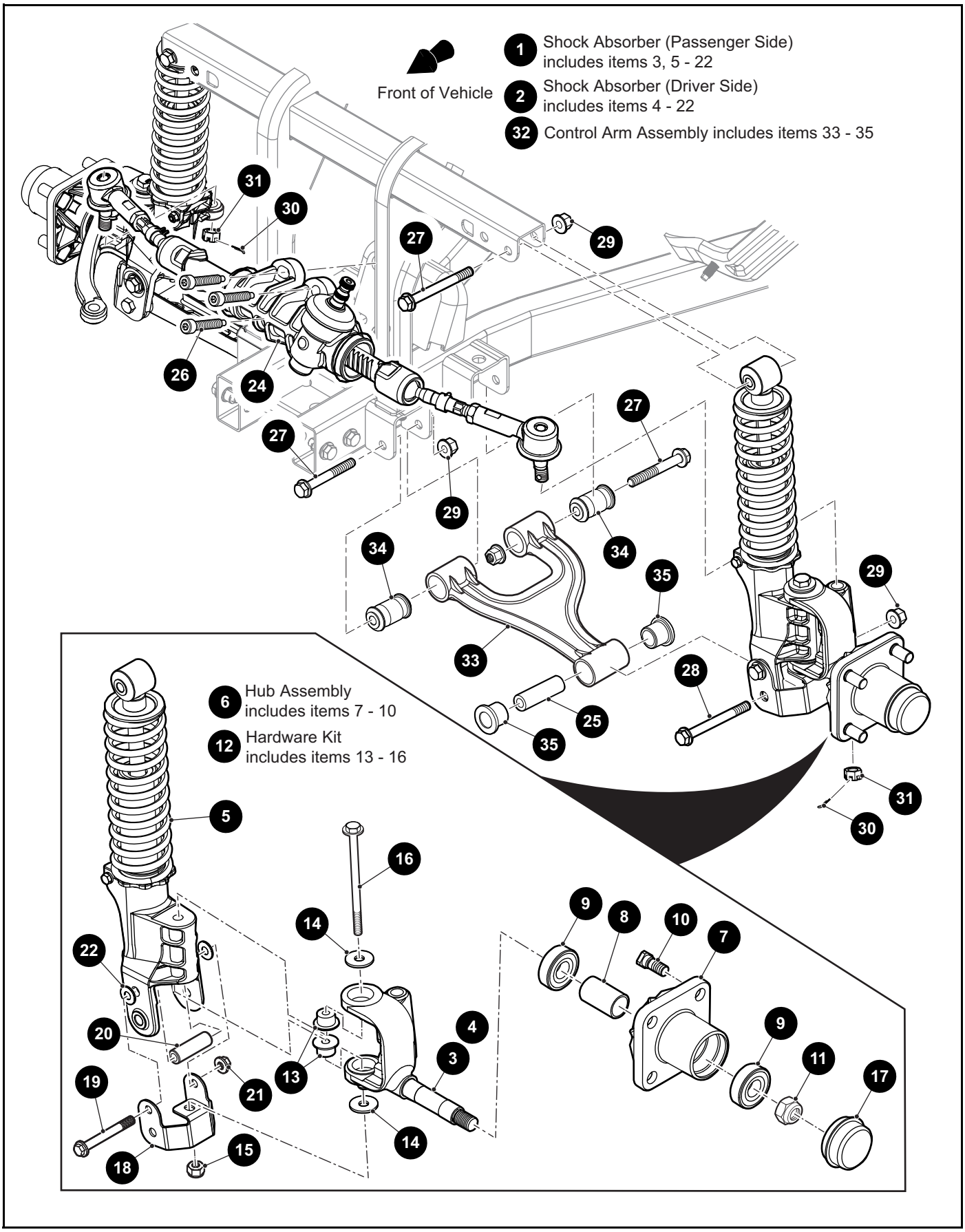
Front of Vehicle
1 Shock Absorber (Passenger Side) includes items 3, 5 - 22
2 Shock Absorber (Driver Side) includes items 4 - 22
32 Control Arm Assembly includes items 33 - 35
6 Hub Assembly includes items 7 - 10
12 Hardware Kit includes items 13 - 16

THE USE OF NON U.L. PARTS WILL VOID ANY U.L. LISTING.
When ordering parts, please specify the model and serial number of the product.
* Indicates a component that is not available as an individual part.
*** Indicates consult Customer Service Department for additional information.

ITEM	PART NO.	1 2 3 4 5 DESCRIPTION	QTY.
1	10006133G02	Shock Absorber (Passenger Side) (Includes Items 3, 5 - 22)	1
2	10006133G01	Shock Absorber (Driver Side) (Includes Items 4 - 22)	1
3	10022282G02	Spindle (Passenger Side)	1
4	10022282G01	Spindle (Driver Side)	1
5	10015699	Strut Assembly	1
6	10010785	Hub Assembly (Includes Items 7 - 10)	1
7	*	Hub	1
8	*	Bearing Spacer, 28mm O.D. x 22mm I.D. x 46.7mm Lg	1
9	*	Ball Bearing, 47mm O.D. x 20mm I.D. x 14mm	2
10	19862G1	Wheel Bolt, 1/2” - 20 x 1.218" Lg	4
11	615109	Lock Nut, M16 - 2	1
12	10022856	Hardware Kit (Includes Items 13 - 16)	1
13	699702	King Pin, 25mm	2
14	699701	Washer, 30mm O.D x 10.5mm I.D x 2.5mm	2
15	616675	Lock Nut, M10 x 1.50	1
16	10006771	Flanged Hex Head Bolt, M10 - 1.5 x 130mm Lg	1
17	12091G2	Spindle Cap	1
18	10001464	Knuckle Support Bracket	1
19	601754	Flanged Hex Head Bolt, M10 - 1.5 x100mm Lg	1
20	10003339	Tube, 18.5 O.D x 10.8 I.D x 59.35mm Lg	1
21	*	Flanged Hex Nut, M10 x 1.5	1
22	603823	Flat Washer, M10 x 22mm x 2.5mm	2
23			
24	10033613	Steering Rack Assembly	1
25	602085	Control Arm Carrier Tube	2
26	602020	Socket Head Bolt, M10 - 1.5 x 50mm Lg	3
27	602415	Flanged Hex Head Bolt, M10 - 1.5 x 80mm Lg	6
28	601754	Flanged Hex Head Bolt, M10 - 1.5 x100mm Lg	2
29	600525	Lock Nut, M10 - 1.5	8
30	10387G2	Cotter Pin, .094" x 1"	2
31	608005	Castle Nut (SS), M12 - 1.25	2

FRONT SUSPENSION AND STEERING

THE USE OF NON U.L. PARTS WILL VOID ANY U.L. LISTING.
When ordering parts, please specify the model and serial number of the product.
* Indicates a component that is not available as an individual part.
*** Indicates consult Customer Service Department for additional information.

ITEM	PART NO.	1 2 3 4 5 DESCRIPTION	QTY.
32	10005744	Control Arm Assembly (Includes Items 33 - 35)	2
33	10007496	Control Arm	1
34	10010790	Isolator Sleeve (Rubber)	2
35	601340	Bushing	2

Notes:

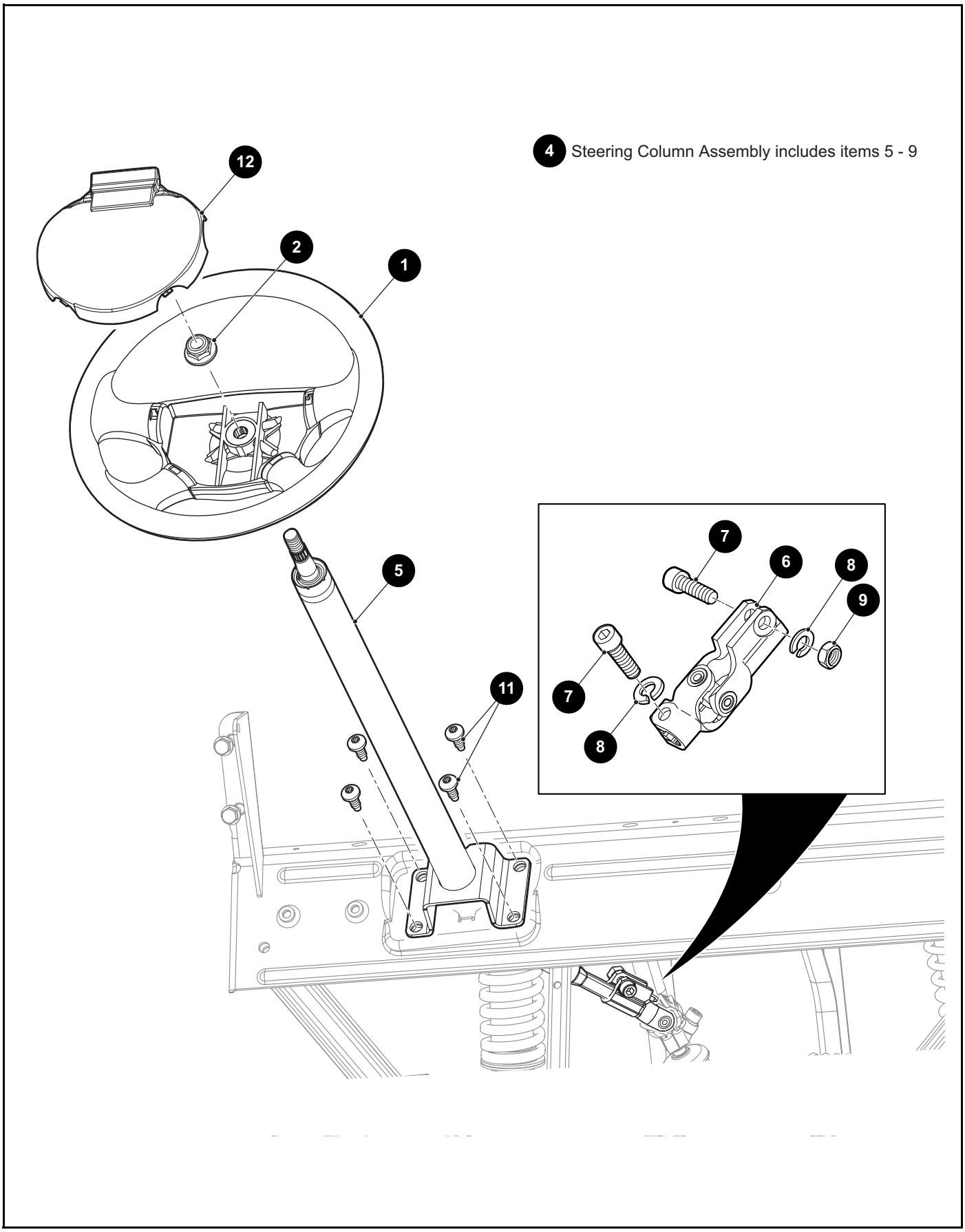
4 Steering Column Assembly includes items 5 - 9
12
2
1
5
11
7
6
8
9
7
8

THE USE OF NON U.L. PARTS WILL VOID ANY U.L. LISTING.
When ordering parts, please specify the model and serial number of the product.
* Indicates a component that is not available as an individual part.
*** Indicates consult Customer Service Department for additional information.

ITEM	PART NO.	1 2 3 4 5 DESCRIPTION	QTY.
1	602980	Steering Wheel	1
2	601709	Lock Nut, M16 - 2	1
3			
4	691365	Steering Column Assembly (Includes Items 5 - 9)	1
5	691315	Steering Column	1
6	608114	Steering Yoke	1
7	608653	Socket Head Bolt, M10 - 1.5 x 35mm Lg	2
8	608654	Lock Washer, 10.5mm	2
9	608655	Hex Nut, M10 - 1.5	1
10			
11	602572	Pan Head Taptite Bolt, M10 - 1.5 x 20mm Lg, Grade 8.8	4
12	607925	Scorecard Holder	1

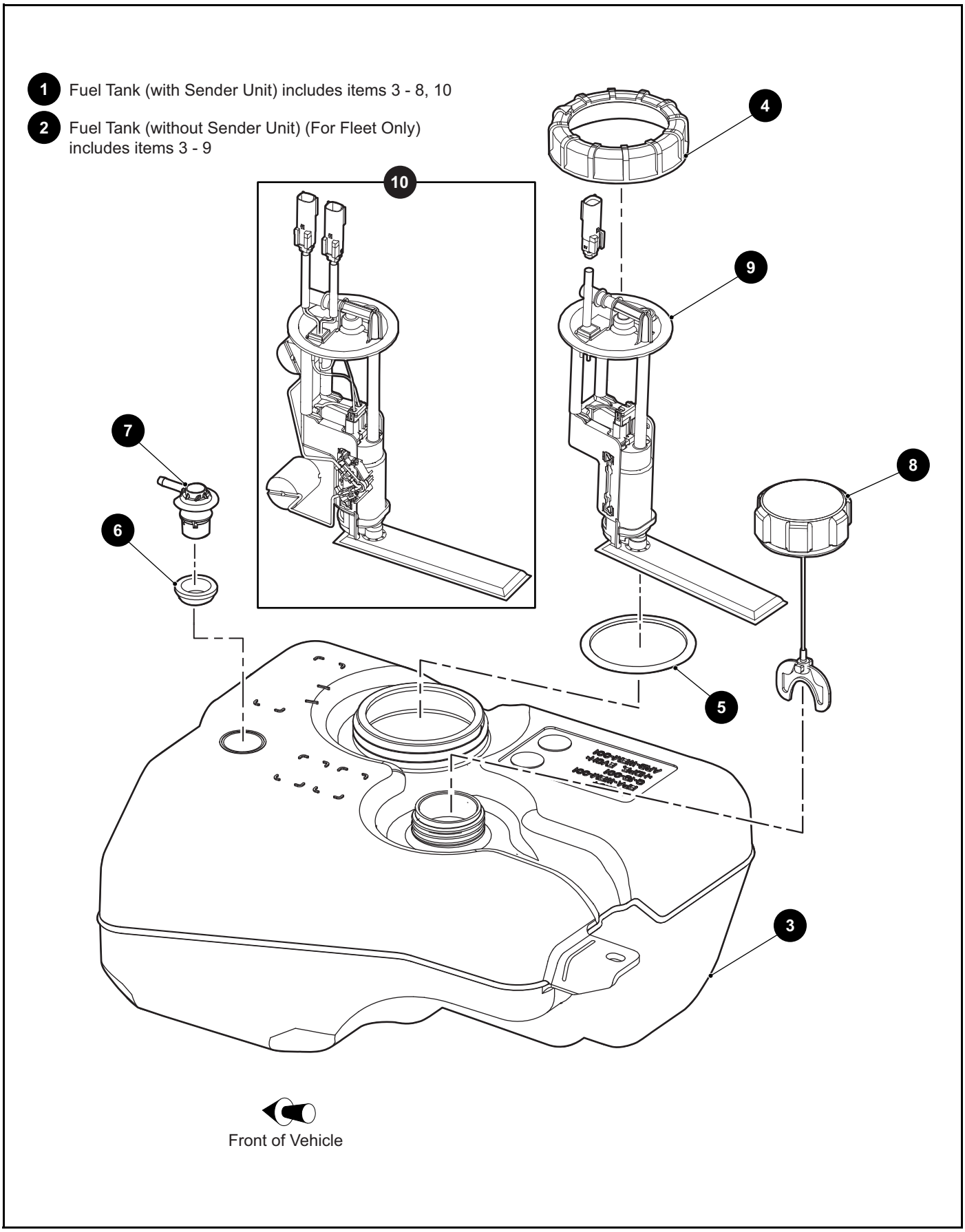
1 Fuel Tank (with Sender Unit) includes items 3 - 8, 10
2 Fuel Tank (without Sender Unit) (For Fleet Only) includes items 3 - 9
10
4
9
7
8
6
5
3
Front of Vehicle

THE USE OF NON U.L. PARTS WILL VOID ANY U.L. LISTING.
When ordering parts, please specify the model and serial number of the product.
* Indicates a component that is not available as an individual part.
*** Indicates consult Customer Service Department for additional information.

ITEM	PART NO.	1 2 3 4 5 DESCRIPTION	QTY.
1	10027039	Fuel Tank (with Sender Unit) (Includes Items 3 - 8,10)	1
2	10027038	Fuel Tank (without Sender Unit) (Includes Items 3 - 9) (For Fleet Only)	1
3	646284	Fuel Tank	1
4	646837	Fuel Pump Lid	1
5	10029660	Mason Jar Seal	1
6	647810	Rollover Valve Grommet	1
7	647809	Rollover Valve	1
8	670898	Fuel Tank Cap (Ratchet)	1
9	10027047	Fuel Pickup without Sender Assembly	1
10	10027048	Fuel Pickup with Sender Assembly	1

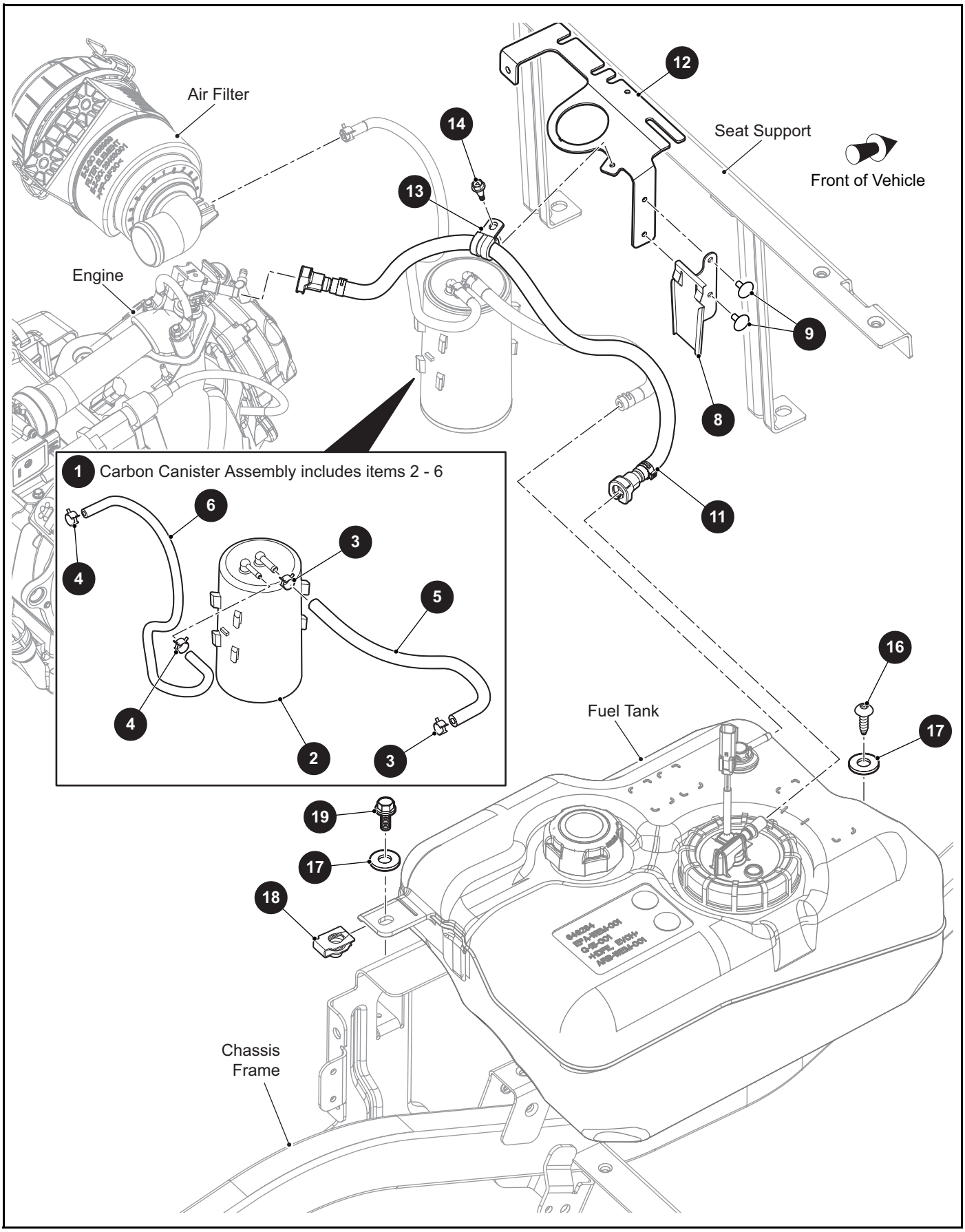
Air Filter
Engine
Seat Support
Front of Vehicle
1 Carbon Canister Assembly includes items 2 - 6
Fuel Tank
Chassis Frame
1
2
3
4
5
6
8
9
11
12
13
14
16
17
18
19

THE USE OF NON U.L. PARTS WILL VOID ANY U.L. LISTING.
When ordering parts, please specify the model and serial number of the product.
* Indicates a component that is not available as an individual part.
*** Indicates consult Customer Service Department for additional information.

ITEM	PART NO.	1 2 3 4 5 DESCRIPTION	QTY.
1	692585	Carbon Canister Assembly (Includes Items 2 - 6)	1
2	10006822	Carbon Canister	1
3	18292G1	Tubing Clamp	2
4	606963	Tubing Clamp, 3/16" I.D. Hose	2
5	27184G14	Fuel System Tube, I.D. .25" x O.D. .5" x 13" Lg	1
6	684332	Hose, 3/16" I.D. x 22" Lg	1
7			
8	606310	Canister Mounting Bracket	1
9	15058G1	Rivet (Aluminum), 3/16" x .45" Lg	2
10			
11	680391	Fuel Hose	1
12	693390	Hour Meter Mounting Bracket	1
13	664747	Tube Cushion Clamp, .5"	1
14	01038G01	Hex Washer Head Swageform Screw with Dog Point, 1/4" - 20 x 3/4" Lg	1
15			
16	649804	Button Head Torx Bolt, M8 - 3.5 x 30mm Lg	1
17	604066	Flat Washer, M10	2
18	603818	Barrel Clip, M10 - 1.5	1
19	603799	Flanged Hex Head Bolt, M10 - 1.5 x 25mm Lg, Grade 8.8	1

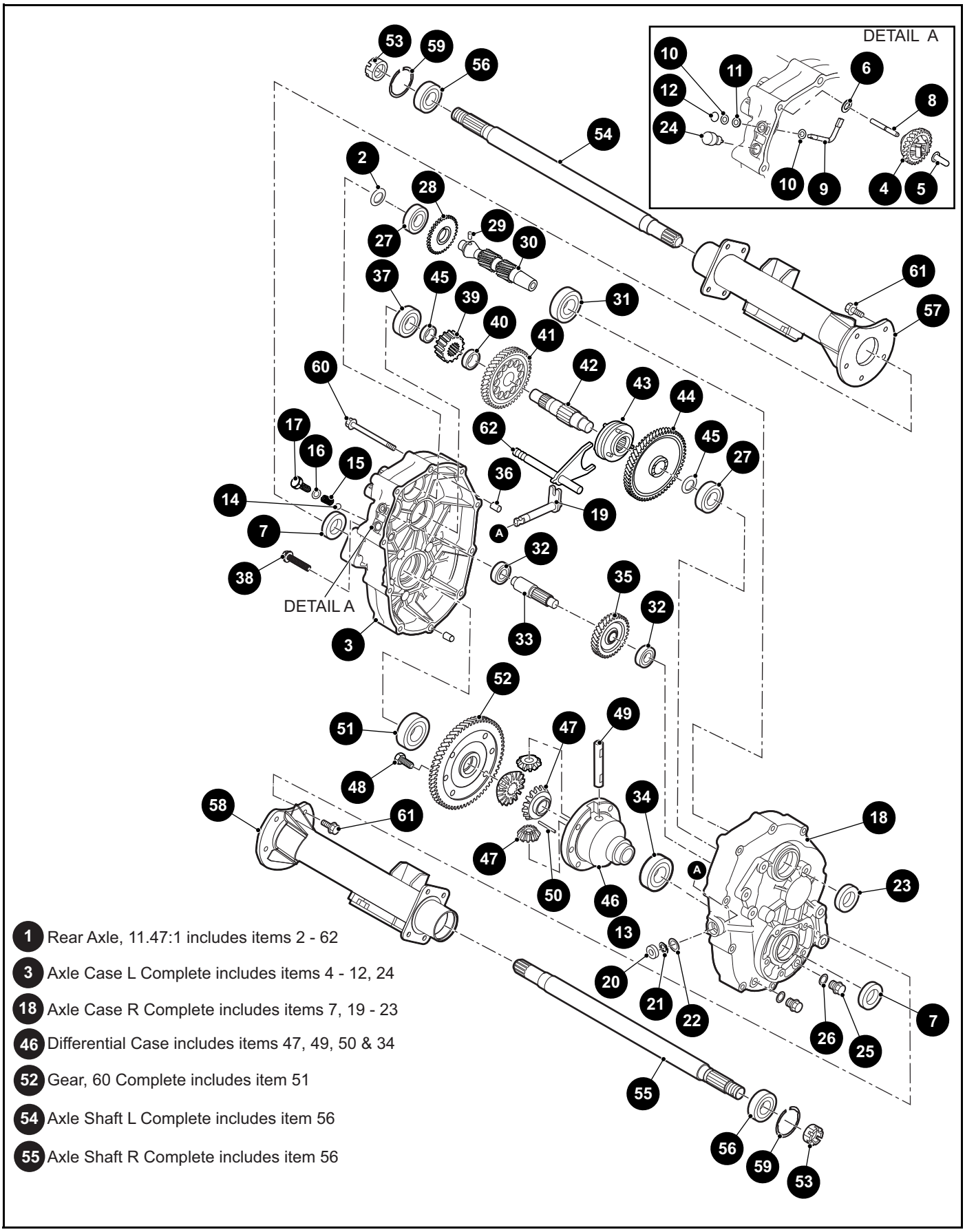
DETAIL A
DETAIL A
1 Rear Axle, 11.47:1 includes items 2 - 62
3 Axle Case L Complete includes items 4 - 12, 24
18 Axle Case R Complete includes items 7, 19 - 23
46 Differential Case includes items 47, 49, 50 & 34
52 Gear, 60 Complete includes item 51
54 Axle Shaft L Complete includes item 56
55 Axle Shaft R Complete includes item 56

THE USE OF NON U.L. PARTS WILL VOID ANY U.L. LISTING.
When ordering parts, please specify the model and serial number of the product.
* Indicates a component that is not available as an individual part.
*** Indicates consult Customer Service Department for additional information.

ITEM	PART NO.	1 2 3 4 5 DESCRIPTION	QTY.
1	677877	Rear Axle, 11.47:1 (Includes Items 2 - 62)	1
2	10007594	O-Ring	1
3	10007589	Axle Case L Complete (Includes Items 4 - 12, 24)	1
4	665887	Governor Gear	1
5	639689	Governor Sleeve	1
6	607904	Flat Washer	1
7	639738	Oil Seal, 24 x 40 x 9mm	2
8	639698	Governor Gear Shaft	1
9	639707	Governor Shaft	1
10	639736	Flat Washer, 6mm	2
11	607911	Oil Seal, 6 x 10 x 2.5mm	1
12	607913	Retaining Ring, E5	1
13	639847	Differential Assembly	1
14	26818G01	Steel Ball	1
15	26819G01	Spring	1
16	26831G01	Gasket	1
17	26820G01	Flanged Hex Head Bolt, M10 - 1.25 x 12mm Lg	1
18	10007590	Axle Case R Complete (Includes Items 7, 19 - 23)	1
19	639746	Select Shaft	1
20	607915	Oil Seal, 13 x 22 x 5mm	1
21	607916	Snap Ring, 13mm	1
22	607917	Spacer, 13 x 1mm	1
23	640093	Oil Seal, 28 x 47 x 9mm	1
24	607919	Air Breather	1
25	639747	Oil Drain Plug	2
26	639748	Gasket, 14mm	2
27	26785G01	Ball Bearing	1
28	10010619	Governor Gear	1
29	607920	Pin, 6 x 12L	1
30	10007591	Input Shaft	1
31	607922	Ball Bearing (62/28)	2

REAR AXLE

THE USE OF NON U.L. PARTS WILL VOID ANY U.L. LISTING.
When ordering parts, please specify the model and serial number of the product.
* Indicates a component that is not available as an individual part.
*** Indicates consult Customer Service Department for additional information.

ITEM	PART NO.	1 2 3 4 5 DESCRIPTION	QTY.
32	639868	Ball Bearing (TMB202)	2
33	639755	Counter Shaft	1
34	640744	Ball Bearing (6006)	1
35	639758	Gear, 34	1
36	639869	Knock Pipe	2
37	639760	Ball Bearing (6304)	1
38	639768	Flanged Hex Head Bolt, M8 - 1.25 x 40mm Lg	1
39	639769	Gear, 17	1
40	28689G01	Collar, 24 x 7.5mm	1
41	10010624	Gear, 52	1
42	670697	Center Shaft	1
43	10010628	Clutch Pin	1
44	10010634	Gear, 61	1
45	639797	Spacer, 20 x 2mm	2
46	639872	Differential Case (Includes items 47, 49, 50 & 34)	1
47	639800	Differential Pair Gear	1
48	26808G01	Hex Head Bolt, M10 - 1.25 x 26mm Lg	6
49	28723G01	Differential Shaft	1
50	28697G01	Spring Pin, 4 x 40L	1
51	639801	Ball Bearing (6007)	1
52	640739	Gear, 60 Complete (Includes Item 51).	1
53	607938	Castle Nut, M22 - 1.5	2
54	639876	Axle Shaft L Complete (Includes Item 56)	1
55	639881	Axle Shaft R Complete (Includes Item 56)	1
56	639836	Ball Bearing (6205DD)	2
57	10007592	Axle Case L Complete	1
58	10007593	Axle Case R Complete	1
59	26814G01	Snap Ring, 52mm	2
60	639839	Flanged Hex Head Bolt, M8 - 1.25 x 60mm Lg	9
61	639840	Flanged Hex Head Bolt, M10 - 1.25 x 25mm Lg	10
62	639844	Shift Shaft Complete	1

Notes:

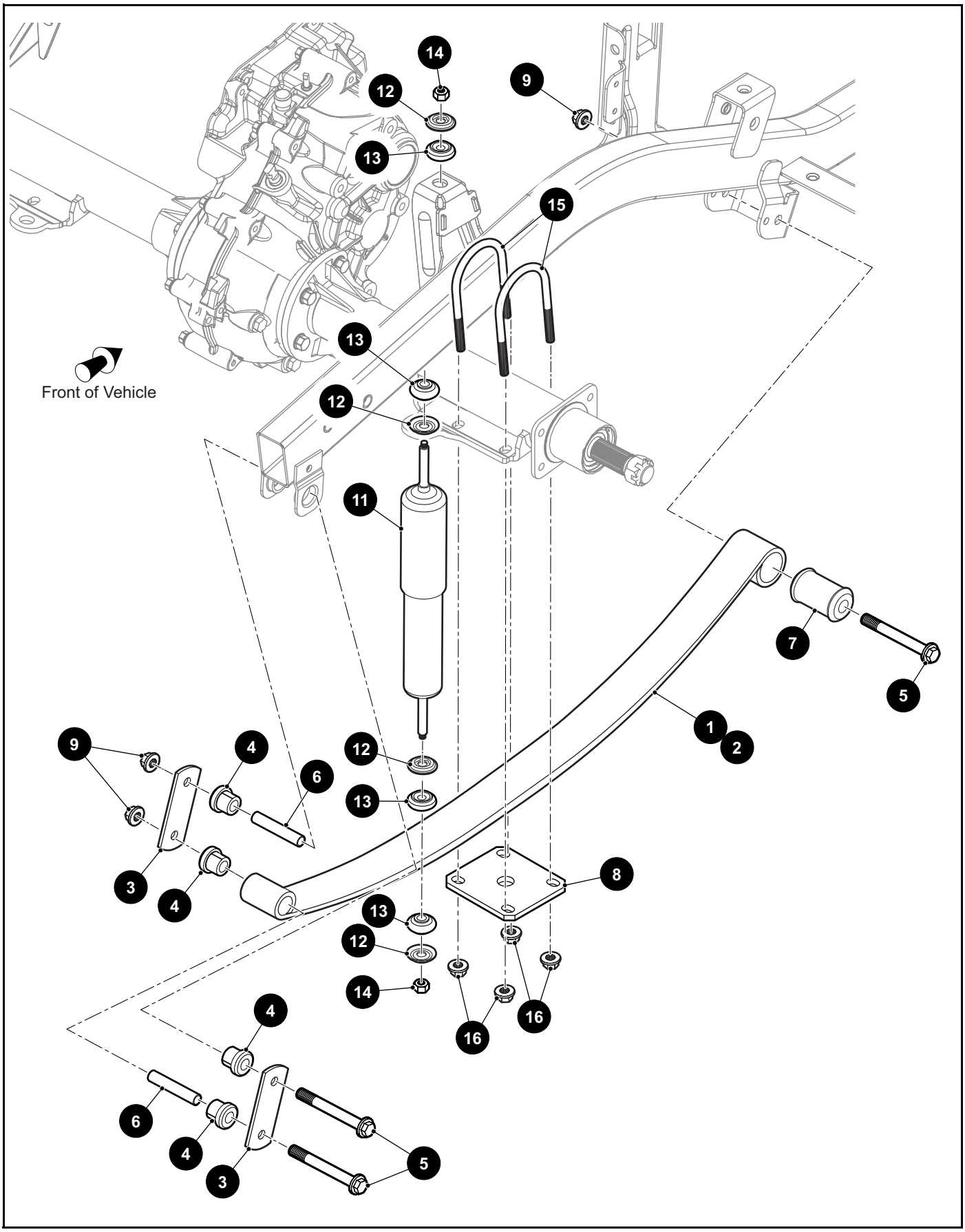
14
12
9
13
15
13
Front of Vehicle
12
11
7
5
1
2
9
4
12
6
13
3
4
8
13
12
14
16
16
4
6
4
3
5

THE USE OF NON U.L. PARTS WILL VOID ANY U.L. LISTING.
When ordering parts, please specify the model and serial number of the product.
* Indicates a component that is not available as an individual part.
*** Indicates consult Customer Service Department for additional information.

ITEM	PART NO.	1 2 3 4 5 DESCRIPTION	QTY.
1	10027130	Leaf Spring (For Fleet & Freedom Only)	2
2	10027610	Heavy Duty Leaf Spring	2
3	652245	Shackle Plate	4
4	10025892	Flanged Bushing	8
5	601754	Flanged Hex Head Bolt, M10 - 1.5 x 100mm Lg, Grade 10.9	6
6	10030184	Split Spacer (Steel)	4
7	605684	Spring Bushing	2
8	692039	Suspension Plate	2
9	600525	Lock Nut, M10 - 1.5	6
10			
11	10024650	Shock Absorber	2
12	10435G1	Shock Absorber Washer, .406" x 1.25" x .22"	8
13	10194G1	Rubber Bushing	8
14	*	Hex Nut, 3/8" - 24	4
15	632103	U-Bolt, 68mm Dia x 45mm x 110mm Lg	4
16	600525	Lock Nut, M10 - 1.5	8

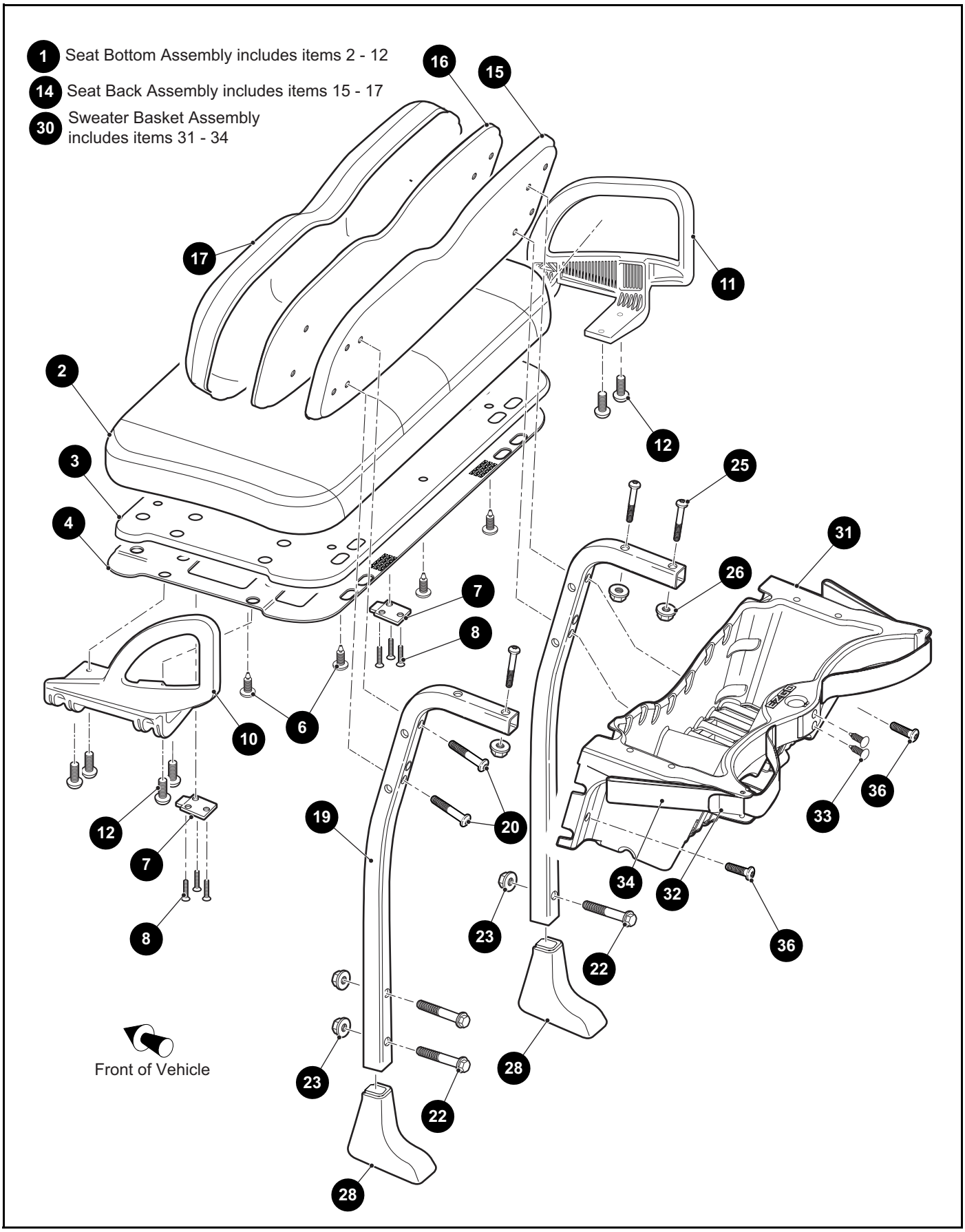
1 Seat Bottom Assembly includes items 2 - 12
14 Seat Back Assembly includes items 15 - 17
30 Sweater Basket Assembly includes items 31 - 34
Front of Vehicle

THE USE OF NON U.L. PARTS WILL VOID ANY U.L. LISTING.
When ordering parts, please specify the model and serial number of the product.
* Indicates a component that is not available as an individual part.
*** Indicates consult Customer Service Department for additional information.

ITEM	PART NO.	1 2 3 4 5 DESCRIPTION	QTY.
1	***	Seat Bottom Assembly (Includes Items 2 - 12)	1
		629269G4002 Stone Beige	
		629269G4001 Oyster	
		629269G4006 Black	
		629269G4004 Gray	
2	***	Vinyl and Foam Seat Bottom	1
		644819G02 Stone Beige	
		644819G01 Oyster	
		644819G06 Black	
		644819G04 Gray	
3	10007867	Base Assembly	1
4	602551	Cover Plate	1
5			
6	16816G2	Ratchet Rivet, .25" x .887"	4
7	71610G01	Seat Hinge	2
8	00720G08	Flat Head Phillips Tapping Screw, #12 - 14 x 1" Lg	6
9			
10	617645	Hip Restraint (Driver Side)	1
11	617644	Hip Restraint (Passenger Side)	1
12	615417	Button Head Torx Bolt, M10 - 1.5 x 25mm Lg	8
13			
14	***	Seat Back Assembly (Includes Items 15 - 17)	1
		641897G0002 Stone Beige	
		641897G0001 Oyster	
		641897G0006 Black	
		641897G0004 Gray	
15	605529	Cover (Plastic) (Black)	1
16	644268	Base Assembly	1
17	***	Vinyl Cover and Foam Seat Back	1
		644820G02 Stone Beige	
		644820G01 Oyster	
		644820G06 Black	
		644820G04 Gray	
18			
19	602413	Seat Back Support Strut (For Fleet & Freedom Only)	2
20	10029147	Button Head Torx Bolt, M10 - 1.5 x 60mm Lg	4
21			

SEATING

THE USE OF NON U.L. PARTS WILL VOID ANY U.L. LISTING.
When ordering parts, please specify the model and serial number of the product.
* Indicates a component that is not available as an individual part.
*** Indicates consult Customer Service Department for additional information.

ITEM	PART NO.	1 2 3 4 5 DESCRIPTION	QTY.
		ITEMS FROM 22 - 36 (FOR FLEET & FREEDOM ONLY)	
22	603800	Flanged Hex Head Bolt, M10 - 1.5 x 50mm Lg	4
23	600525	Flanged Lock Nut, M10 - 1.5	4
24			
25	600527	Button Head Torx Bolt, M10 - 1.5 x 60mm Lg	4
26	600525	Flanged Lock Nut, M10 - 1.5	4
27			
28	645088	Seat Back Support Strut Cover	2
29			
30	602742	Sweater Basket Assembly (Includes Items 31 - 34)	1
31	*	Sweater Basket	1
32	608051	Clamp (Bagrack)	2
33	16816G1	Rachet Rivet, .25" x .680"	2
34	604102	Bag Strap	1
35			
36	600530	Button Head Torx Bolt, M10 - 1.5 x 25mm Lg	2

Notes:

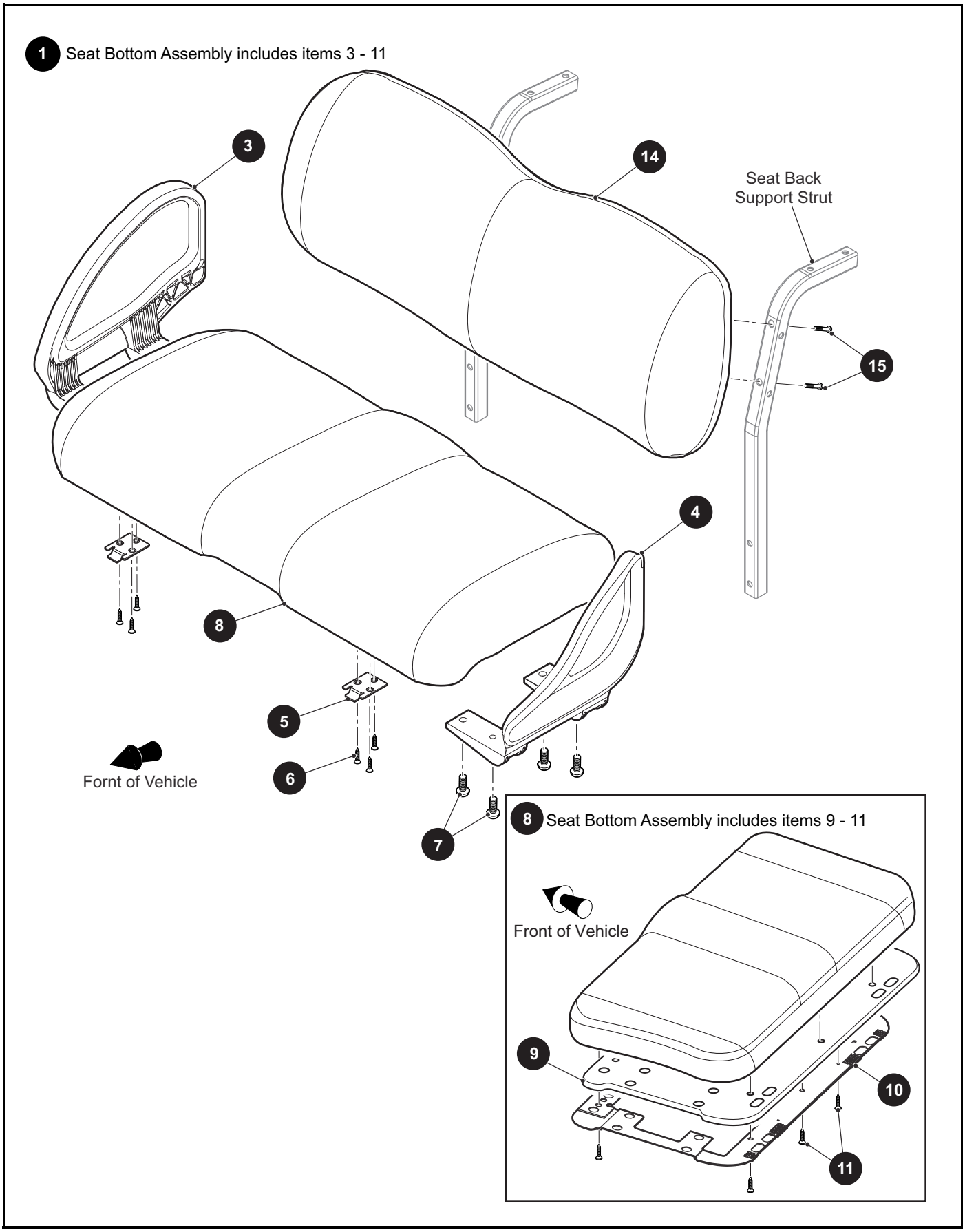
1 Seat Bottom Assembly includes items 3 - 11
3
14
Seat Back
Support Strut
15
4
8
5
6
7
Fornt of Vehicle
8 Seat Bottom Assembly includes items 9 - 11
Front of Vehicle
9
10
11

THE USE OF NON U.L. PARTS WILL VOID ANY U.L. LISTING.
When ordering parts, please specify the model and serial number of the product.
* Indicates a component that is not available as an individual part.
*** Indicates consult Customer Service Department for additional information.

ITEM	PART NO.	1 2 3 4 5 DESCRIPTION	QTY.
1	***	Seat Bottom Assembly (Includes Items 3 - 11)	1
		629269G4618 Mushroom	
		629269G4619 Gray	
		629269G4620 Custom	
		629269G4621 Black	
		629269G4623 Charcoal	
		629269G4624 Oyster	
		629269G4625 White	
2			
3	617644	Hip Restraint (Passenger Side)	1
4	617645	Hip Restraint (Driver Side).....	1
5	71610G01	Seat Hinge	2
6	00720G08	Phillips Head Tapping Screw, #12 -14 x 1" Lg	6
7	615417	Button Head Torx Bolt, M10 - 1.5 x 25mm Lg.....	8
8	***	Seat Bottom (Includes Items 9 - 11)	1
		10046445G18 Mushroom	
		10046445G19 Gray	
		10046445G20 Custom	
		10046445G21 Black	
		10046445G23 Charcoal	
		10046445G24 Oyster	
		10046445G25 White	
9	10007867	Base Assembly.....	1
10	602551	Cover Plate	1
11	16816G2	Ratchet Rivet, .25" x .887"	4
12			
13			
14	***	Premium Seat Back Assembly	1
		10046623G18 Mushroom	
		10046623G19 Gray	
		10046623G20 Custom	
		10046623G21 Black	
		10046623G23 Charcoal	
		10046623G24 Oyster	
		10046623G25 White	
15	10029147	Button Head Torx Bolt, M10 - 1.5 x 60mm Lg	4

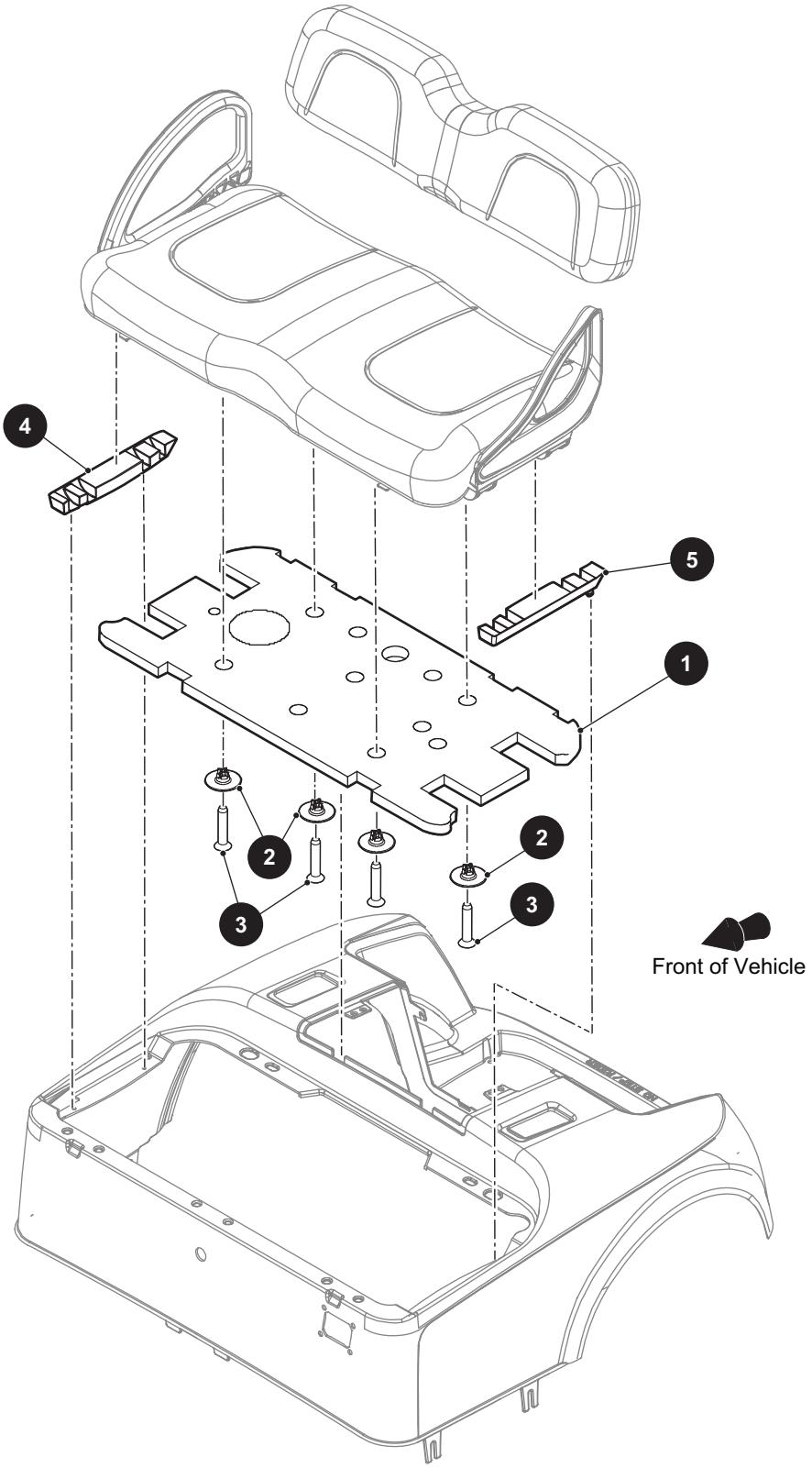
4
5
1
2
2
3
3
Front of Vehicle

THE USE OF NON U.L. PARTS WILL VOID ANY U.L. LISTING.
When ordering parts, please specify the model and serial number of the product.
* Indicates a component that is not available as an individual part.
*** Indicates consult Customer Service Department for additional information.

ITEM	PART NO.	1 2 3 4 5 DESCRIPTION	QTY.
1	10014008	Sound Treatment (Seat Bottom)	1
2	663426	Sound Treatment Retainer	4
3	00720G08	Flat Head Phillips Tapping Screw, #12 - 14 x 1" Lg	4
4	10030830G02	Seat Closeout (Passenger Side)	1
5	10030830G01	Seat Closeout (Driver Side)	1

FOR SHUTTLE 2+2 ONLY

1 Flip Seat Bottom Assembly includes items 2 - 4

6 Seat Back Assembly includes items 7 - 9

11 Premium Flip Seat Bottom Assembly includes item 12

14 Premium Seat Back Assembly includes item 15

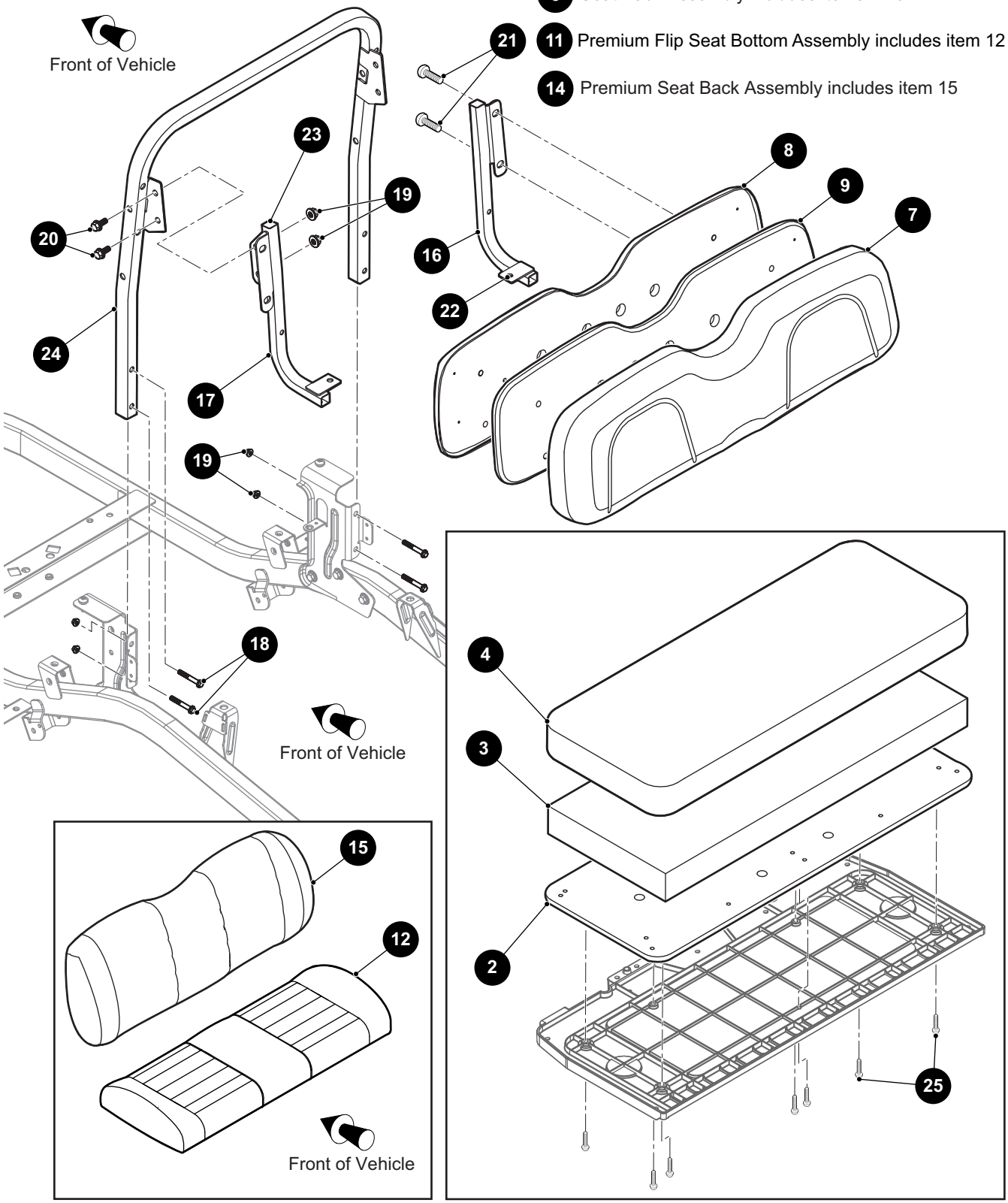

THE USE OF NON U.L. PARTS WILL VOID ANY U.L. LISTING.
When ordering parts, please specify the model and serial number of the product.
* Indicates a component that is not available as an individual part.
*** Indicates consult Customer Service Department for additional information.

ITEM	PART NO.	1 2 3 4 5 DESCRIPTION	QTY.
1	***	Flip Seat Bottom Assembly (Includes Items 2 - 4)	1
		699321G01 Oyster	
		699321G02 Stone Beige	
		699321G04 Gray	
		699321G06 Black	
2	669061	Seat Bottom	1
3	699297	Seat Bottom (Foam)	1
4	***	Seat Bottom (Vinyl).....	1
		615646 Oyster	
		10027441 Stone Beige	
		617892 Gray	
		615648 Black	
5			
6	***	Seat Back Assembly (Includes Items 7 - 9).....	1
		641897G0001 Oyster	
		641897G0002 Stone Beige	
		641897G0006 Black	
		641897G0004 Gray	
7	***	Vinyl Seat Back Cover	1
		644820G01 Oyster	
		644820G02 Stone Beige	
		644820G06 Black	
		644820G04 Gray	
8	605529	Seat Back Cover.....	1
9	644268	Seat Back Hip Base.....	1
10			
11	***	Premium Flip Seat Bottom Assembly (Includes Item 12).....	1
		10046625G18 Mushroom	
		10046625G19 Gray	
		10046625G20 Custom	
		10046625G21 Black	
		10046625G23 Charcoal	
		10046625G24 Oyster	
		10046625G25 White	
12	669061	Flip Seat Bottom Combined.....	1
13			

THE USE OF NON U.L. PARTS WILL VOID ANY U.L. LISTING.
When ordering parts, please specify the model and serial number of the product.
* Indicates a component that is not available as an individual part.
*** Indicates consult Customer Service Department for additional information.

ITEM	PART NO.	1 2 3 4 5 DESCRIPTION	QTY.
14	***	Premium Seat Back Assembly (Includes Item 15).....	1
		10046623G18 Mushroom	
		10046623G19 Gray	
		10046623G20 Custom	
		10046623G21 Black	
		10046623G23 Charcoal	
		10046623G24 Oyster	
		10046623G25 White	
15	687137	Seat Back, Plywood	1
16	689616	Rear Facing Seat Support (Passenger Side)	1
17	689466	Rear Facing Seat Support (Driver Side).....	1
18	601414	Flanged Hex Head Bolt, M10 -1.5 x 65mm Lg, Grade 8.8	4
19	600525	Flanged Lock Nut, M10 - 1.5	8
20	603799	Flanged Hex Head Bolt, M10 - 1.5 x 25mm Lg, Grade 8.8	4
21	600530	Button Head Torx Bolt, M10 - 1.5 x 25mm Lg, Grade 8.8.....	4
22	10025895	Barrel Clip, M8 x 1.25	2
23	19853G1	Tube Cap	2
24	604473	Seat Support.....	1
25	*	Button Head Torx Bolt, M8 - 1.25 x 60mm Lg.....	7

Notes:

FOR SHUTTLE 2+2 ONLY

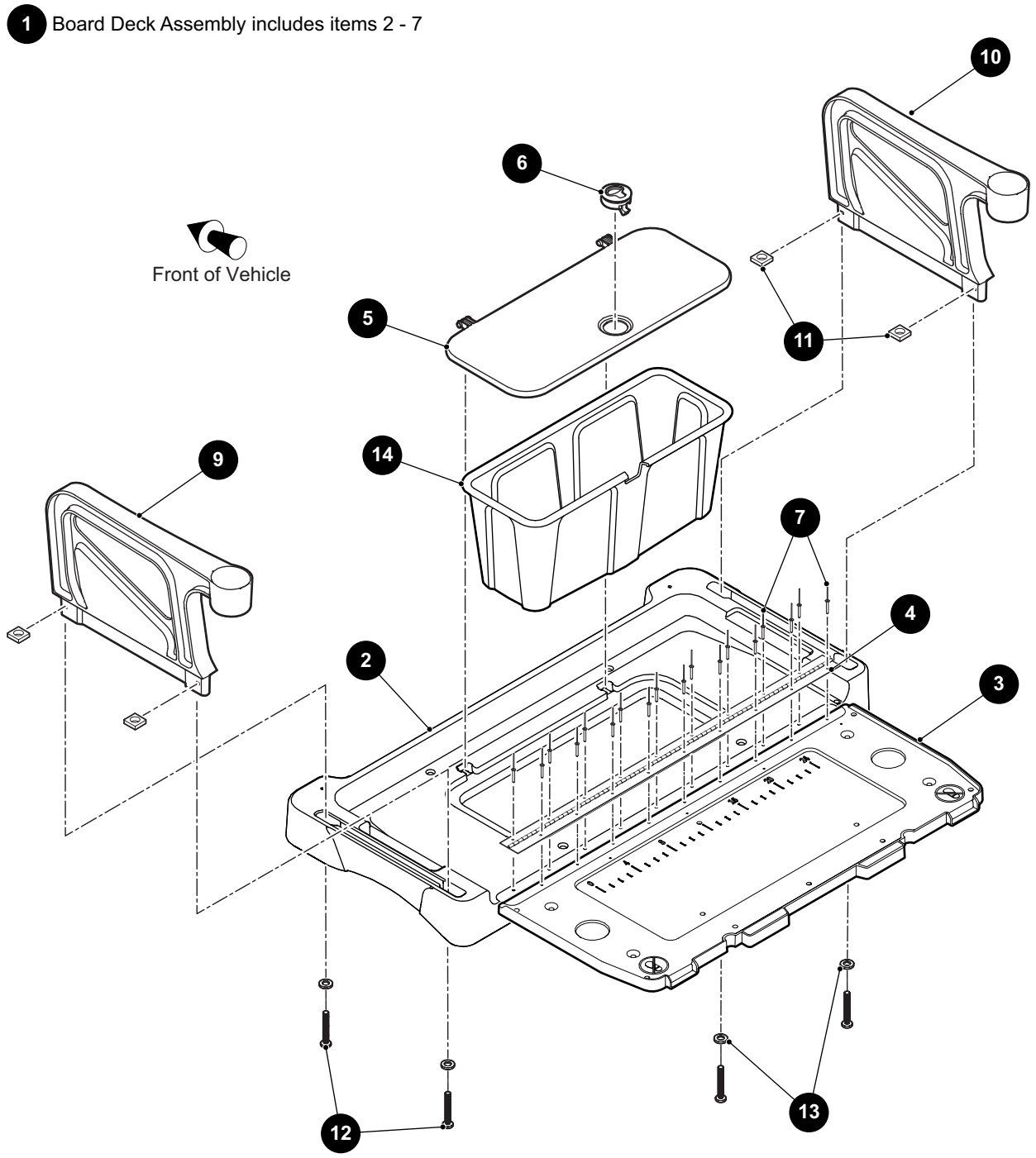

THE USE OF NON U.L. PARTS WILL VOID ANY U.L. LISTING.
When ordering parts, please specify the model and serial number of the product.
* Indicates a component that is not available as an individual part.
*** Indicates consult Customer Service Department for additional information.

ITEM	PART NO.	1 2 3 4 5 DESCRIPTION	QTY.
1	10009995	Board Deck Assembly (Includes Items 2 - 7)	1
2	10007183	Seat Mount Base	1
3	10010592	Flip Seat Base	1
4	10007195	Hinge	1
5	10004646	Seat Bucket Lid	1
6	10008448	Latch Flush Pull	1
7	10010219	Rivet, 5/32"	18
8			
9	10007825G01	Arm Rest (Driver Side)	1
10	10007825G02	Arm Rest (Passenger Side)	1
11	10007630	Flat Square Nut M8 - 1.25	4
12	10008553	Button Head Torx Bolt, M8 - 1.25 x 50mm Lg	4
13	606272	Lock Washer, 8mm	4
14	10005533	Bucket	1

FOR SHUTTLE 2+2 ONLY

8 Rear Footrest Handrail Assembly includes items 9 - 11

13 Footboard Frame Hardware Kit includes items 14- 17

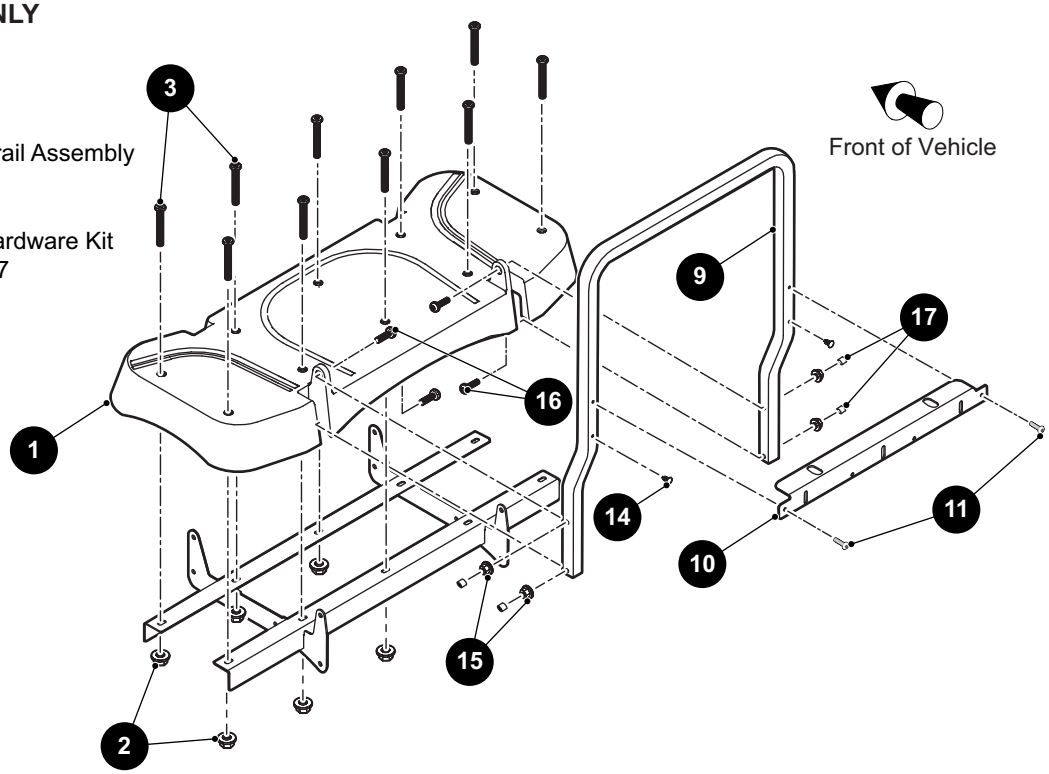

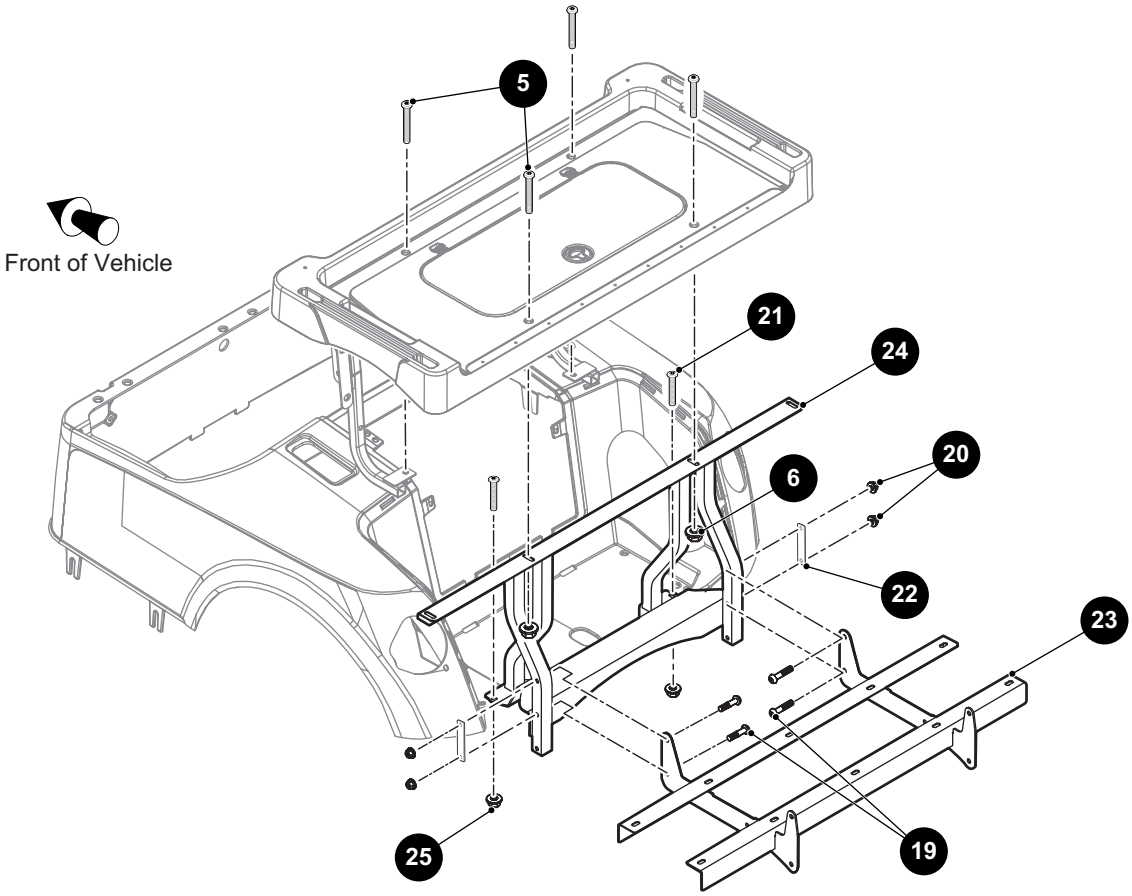

THE USE OF NON U.L. PARTS WILL VOID ANY U.L. LISTING.
When ordering parts, please specify the model and serial number of the product.
* Indicates a component that is not available as an individual part.
*** Indicates consult Customer Service Department for additional information.

ITEM	PART NO.	1 2 3 4 5 DESCRIPTION	QTY.
1	10006567	Footrest	1
2	645956	Flanged Hex Nut, M8 - 1.25	10
3	10007031	Button Head Torx Bolt, M8 - 1.25 x 35mm Lg	10
4			
5	10007031	Button Head Torx Bolt, M8 - 1.25 x 35mm Lg	4
6	645956	Flanged Hex Nut, M8 - 1.25	2
7			
8	10022889	Rear Footrest Handrail Assembly (Includes Items 9 - 11)	1
9	10007862	Footrest Handrail	1
10	10007865	Handrail Crossmember	1
11	10023112	Thread Forming Button Head Torx Screw, M6 - 1 x 20mm Lg	2
12			
13	10029288	Footboard Frame Hardware Kit (Includes Items 14 - 17)	1
14	16816G5	Ratchet Rivet, .187" x .550"	2
15	645956	Flanged Hex Nut, M8 - 1.25	4
16	10008552	Button Head Torx Bolt, M8 - 1.25 x 60mm Lg	4
17	10031844	Thread Cover Cap	4
18			
19	10008552	Button Head Torx Bolt, M8 - 1.25 x 60mm Lg	4
20	645956	Flanged Hex Nut, M8 - 1.25	4
21	10029267	Flanged Round Head Screw, 1/4" - 20 x 2" Lg	2
22	10014848	Pin Plate	2
23	10007628	Footrest Frame	1
24	10043291	Seat Mounting Frame	1
25	10007945	Flanged Hex Nut, 1/4" - 20	2

FOR SHUTTLE 2+2 ONLY

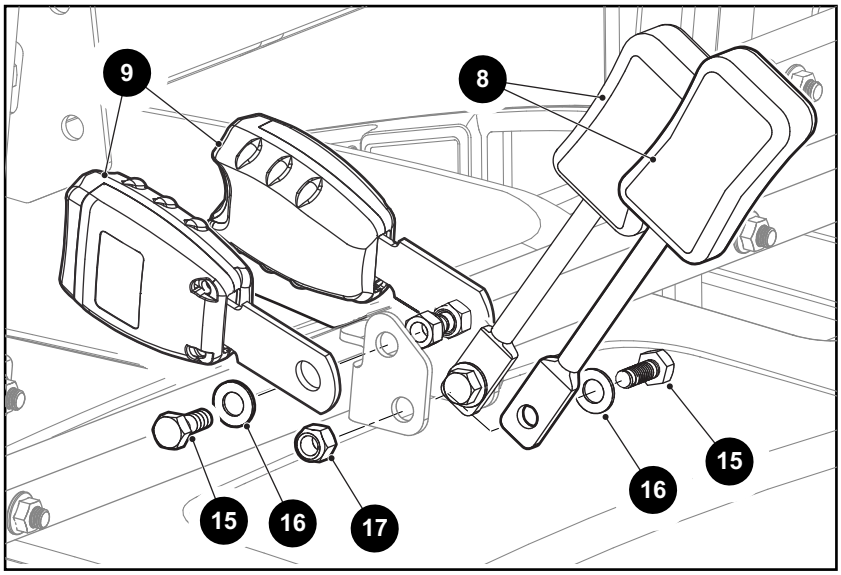

3 Seatbelt Structure Hardware Kit includes items 4 - 6

12 Seatbelt Installation Hardware Kit includes items 13 - 17

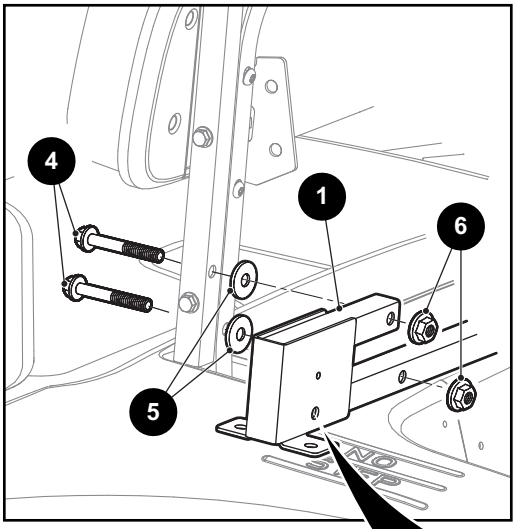

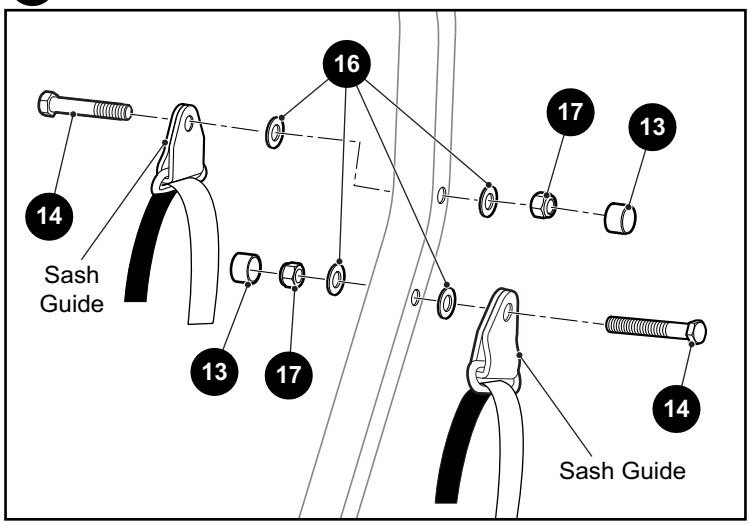

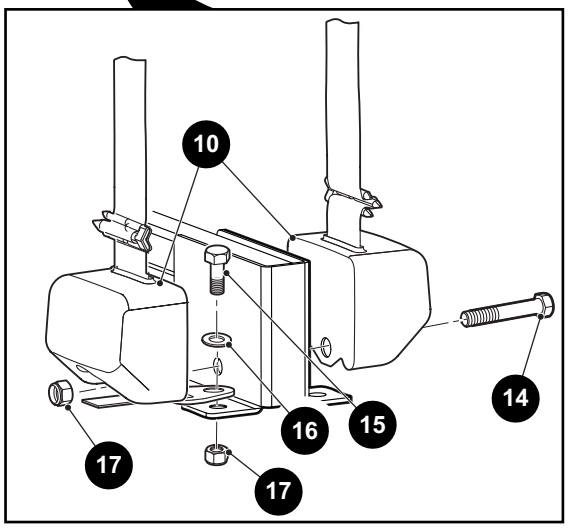

THE USE OF NON U.L. PARTS WILL VOID ANY U.L. LISTING.
When ordering parts, please specify the model and serial number of the product.
* Indicates a component that is not available as an individual part.
*** Indicates consult Customer Service Department for additional information.

ITEM	PART NO.	1 2 3 4 5 DESCRIPTION	QTY.
1	610739	Seatbelt Weldment	1
2			
3	612126	Seatbelt Hardware Kit (Includes Items 4 - 6)	1
4	602415	Flanged Hex Head Bolt, M10 - 1.5 x 80mm Lg, Grade 12.9	4
5	600525	Flanged Lock Nut, M10 - 1.5	4
6	604066	Flat Washer (Steel), M10	4
7			
8	609031	Seat Belt Buckle, 9" Lg	2
9	661524	Seat Belt Buckle, 6" Lg	2
10	649131	Seat Belt Retractor Assembly	4
11			
12	612127	Seatbelt Installation Hardware Kit (Includes Items 13 - 17)	1
13	605686	Vinyl Cap	4
14	612346	Hex Head Bolt, 7/16” - 20 x 2 1/2" Lg, Grade 5	2
15	610753	Hex Head Bolt, 7/16” - 20 x 1" Lg, Grade 5	8
16	00560G2	Flat Washer, 7/16”	16
17	00734G3	Lock Nut, 7/16” - 20	14

FOR FLEET & FREEDOM ONLY

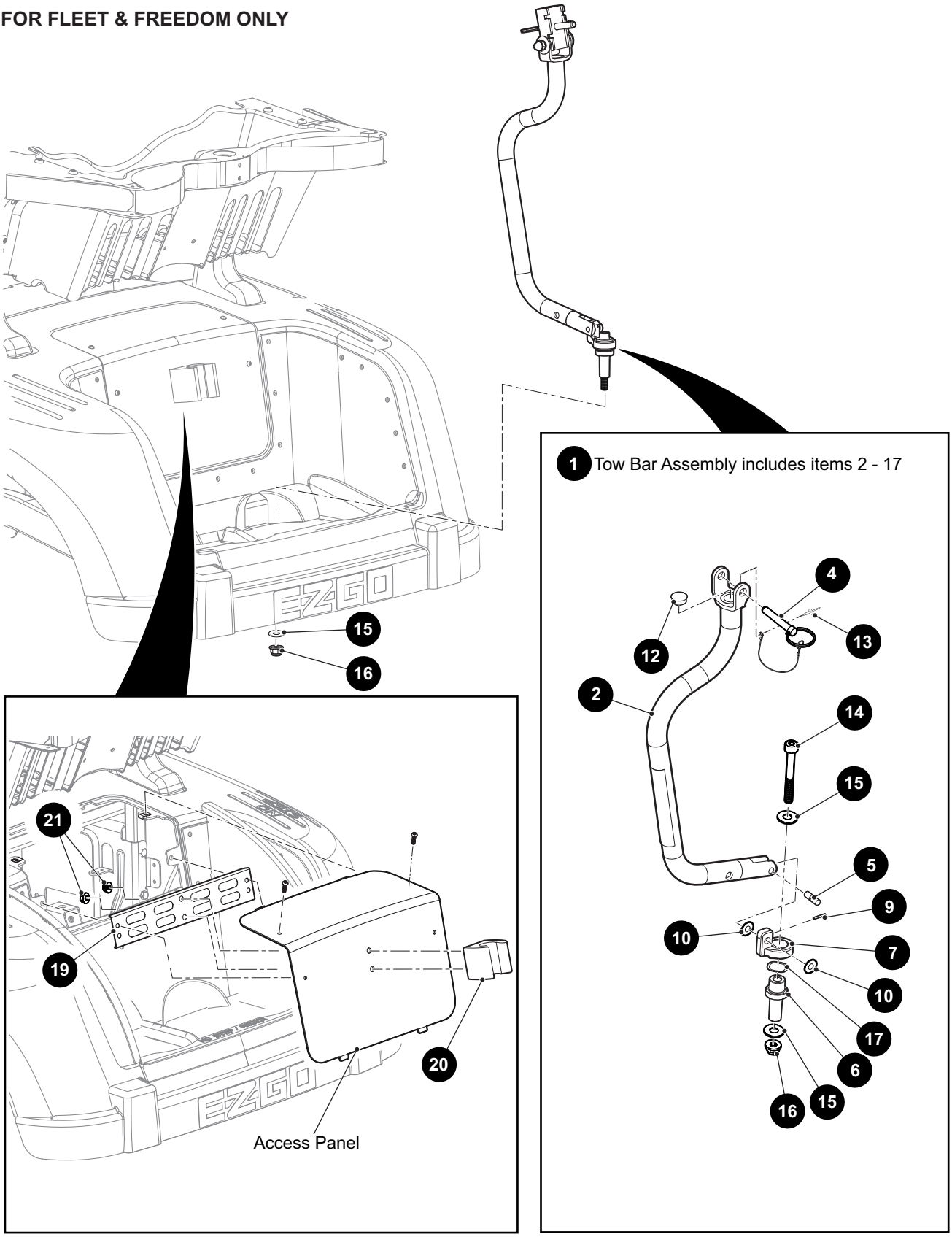

THE USE OF NON U.L. PARTS WILL VOID ANY U.L. LISTING.
When ordering parts, please specify the model and serial number of the product.
* Indicates a component that is not available as an individual part.
*** Indicates consult Customer Service Department for additional information.

ITEM	PART NO.	1 2 3 4 5 DESCRIPTION	QTY.
1	10025958	Towbar Assembly (Includes Items 2 - 17)	1
2	10024526	Towbar	1
3			
4	641170	Hitch Pin Assembly (Short)	1
5	75360G01	Pivot Pin	1
6	602990	Pivot	1
7	625458	Swivel	1
8			
9	608793	Spirol Pin, 3mm x 22mm	1
10	75340G01	Flat Washer (Delrin), M10	2
11			
12	20271G6	Plug, .875” Dia	1
13	10570G10	Domed Rivet (SS), 5/32" x .55" Lg	1
14	603384	Socket Head Bolt, M12 - 1.25 x 100mm Lg	1
15	603182	Flat Washer, M12	2
16	625748	Lock Nut, M12 - 1.25	1
17	603341	Wavy Washer, M32	1
18			
19	641228	Support Channel	1
20	603020	Towbar Retainer	1
21	600525	Flanged Lock Nut, M10 - 1.5	2

FOR FLEET & FREEDOM ONLY

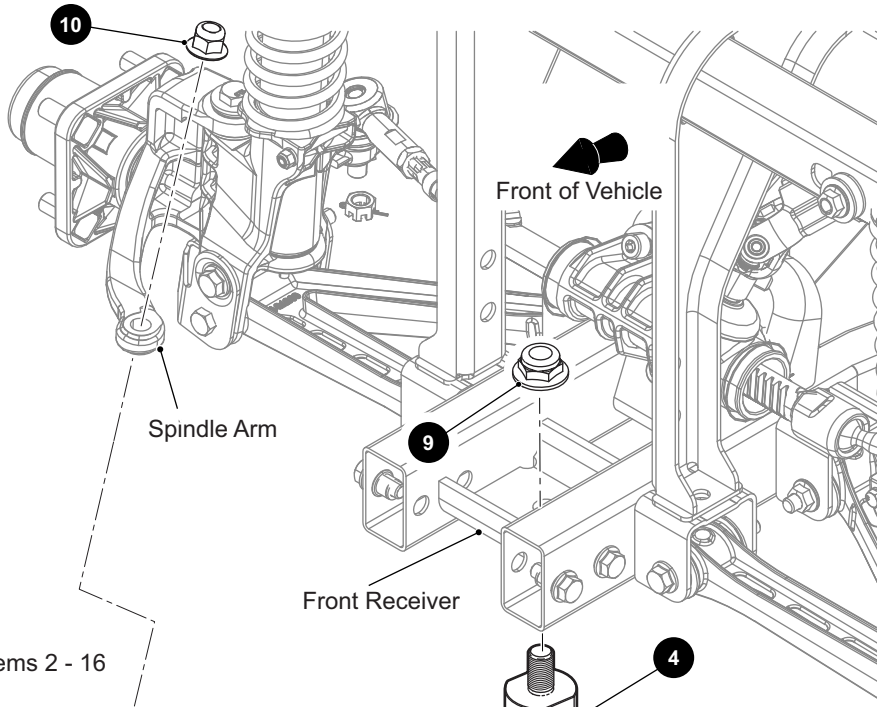

1 Towbar Front Assembly includes items 2 - 16

11 Tie-Rod Assembly includes items 12 - 16

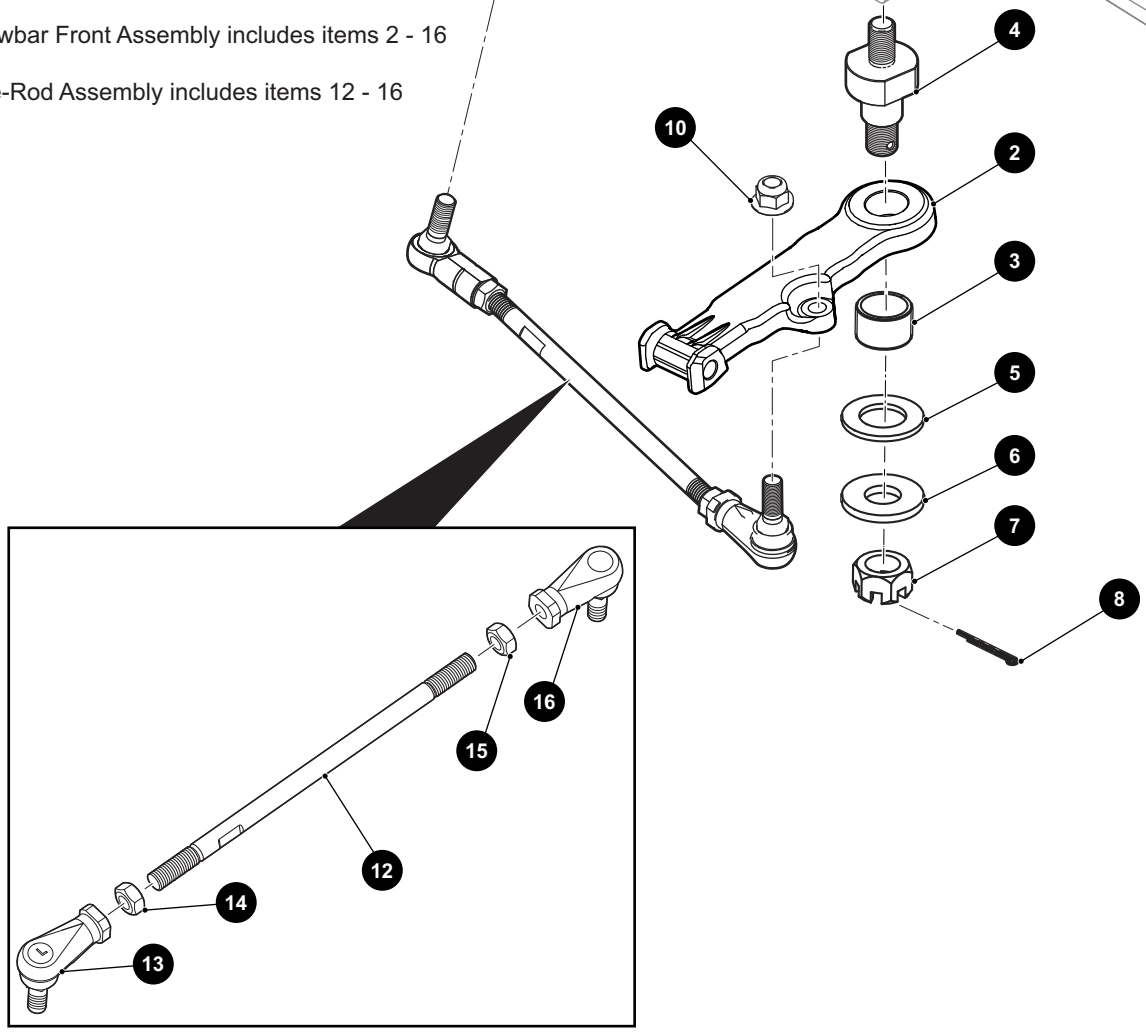

THE USE OF NON U.L. PARTS WILL VOID ANY U.L. LISTING.
When ordering parts, please specify the model and serial number of the product.
* Indicates a component that is not available as an individual part.
*** Indicates consult Customer Service Department for additional information.

ITEM	PART NO.	1 2 3 4 5 DESCRIPTION	QTY.
1	10005045	Towbar Front Assembly (Includes Items 2 - 16)	1
2	10005044	Front Pivot Bar	1
3	75307G01	Bearing	1
4	635464	Pivot Bolt	1
5	75309G01	Thrust Bearing 1.75” O.D. x 1” I.D	1
6	75342G01	Flat Washer, 1.75” O.D. x .78” I.D.	1
7	00518G8	Castle Nut, 3/4” - 16	1
8	10387G1	Cotter Pin, .125" x 1.50"	1
9	601709	Lock Nut, M16 - 2	1
10	617787	Flanged Lock Nut, M12 - 1.75	2
11	10008952	Tie-rod Assembly (Includes Items 12 - 16)	1
12	10008951	Tie-rod	1
13	643610	Tie Rod End, LH	1
14	624962	Hex Nut, M12 - 1.75	1
15	615414	Hex Nut, M12 - 1.75	1
16	614436	Tie Rod End	1

FOR FLEET & FREEDOM ONLY

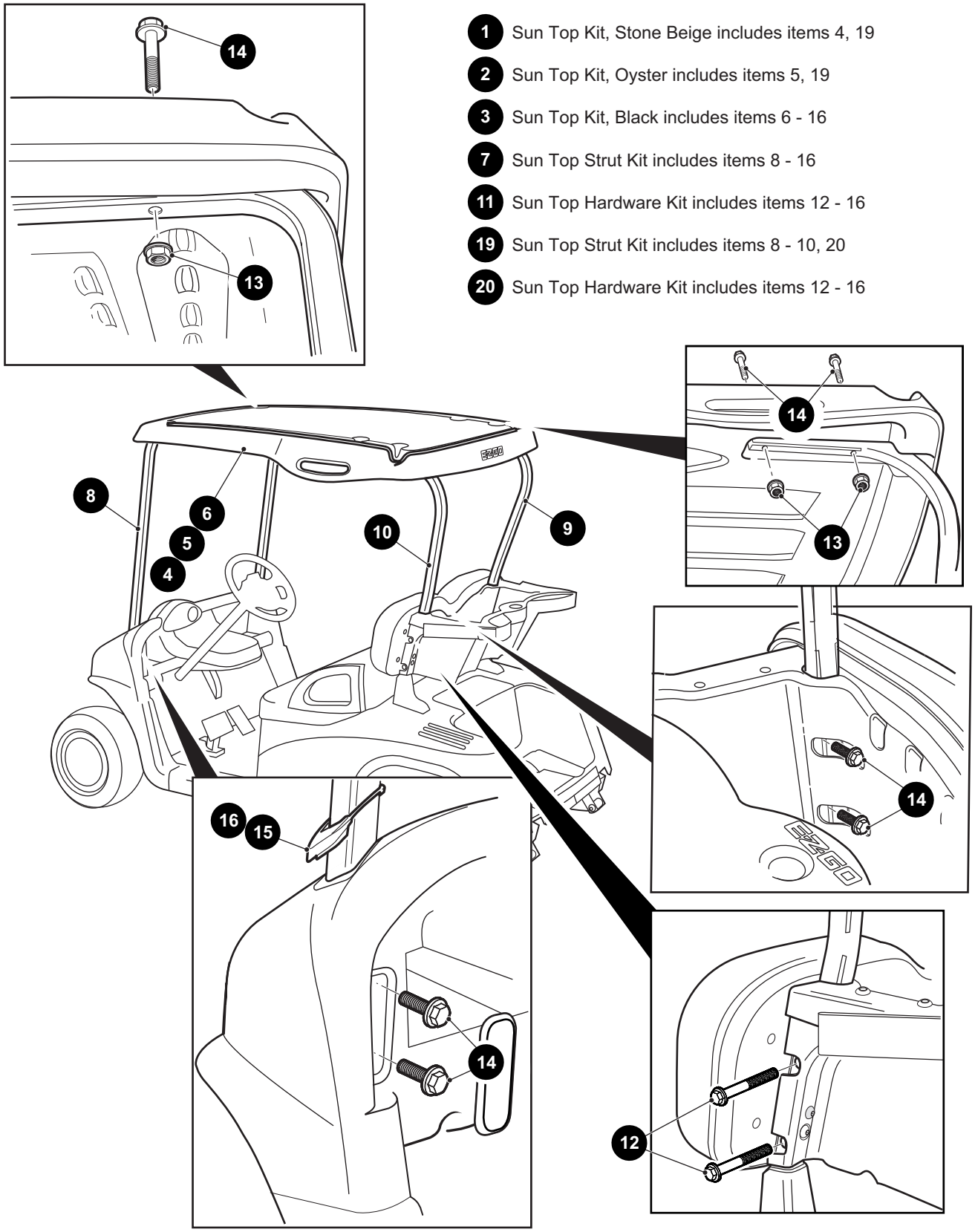

1. Sun Top Kit, Stone Beige includes items 4, 19
2. Sun Top Kit, Oyster includes items 5, 19
3. Sun Top Kit, Black includes items 6 - 16
7. Sun Top Strut Kit includes items 8 - 16
11. Sun Top Hardware Kit includes items 12 - 16
19. Sun Top Strut Kit includes items 8 - 10, 20
20. Sun Top Hardware Kit includes items 12 - 16

THE USE OF NON U.L. PARTS WILL VOID ANY U.L. LISTING.
When ordering parts, please specify the model and serial number of the product.
* Indicates a component that is not available as an individual part.
*** Indicates consult Customer Service Department for additional information.

ITEM	PART NO.	1 2 3 4 5 DESCRIPTION	QTY.
1	610766	Sun Top Kit, Stone Beige (Includes Items 4, 19)	1
2	610767	Sun Top Kit, Oyster (Includes Items 5, 19)	1
3	613233	Sun Top Kit, Black (Includes Items 6 - 16)	1
4	608198	Sun Top	1
5	608015	Sun Top	1
6	613227	Sun Top	1
7	608677	Sun Top Strut Kit (Includes Items 8 - 16)	1
8	603203	Front Strut	1
9	614310	Rear Strut (Passenger Side)	1
10	614309	Rear Strut (Driver Side)	1
11	607013	Sun Top Hardware Kit (Includes Items 12 - 16)	1
12	602415	Flanged Hex Head Bolt, M10 - 1.5 X 80mm Lg	4
13	600525	Flanged Lock Nut, M10 - 1.5	10
14	603800	Flanged Hex Head Bolt, M10 - 1.5 X 50mm Lg	10
15	602770	Grommet (Driver Side)	1
16	602992	Grommet (Passenger Side)	1
17			
18			
19	620880	Sun Top Strut Kit (Includes Items 8 - 10, 20)	1
20	610763	Sun Top Hardware Kit (Includes Items 12 - 16)	1
21			
22	664522G08	GPS Mounting System (Not Illustrated)	1

FOR FLEET & FREEDOM ONLY

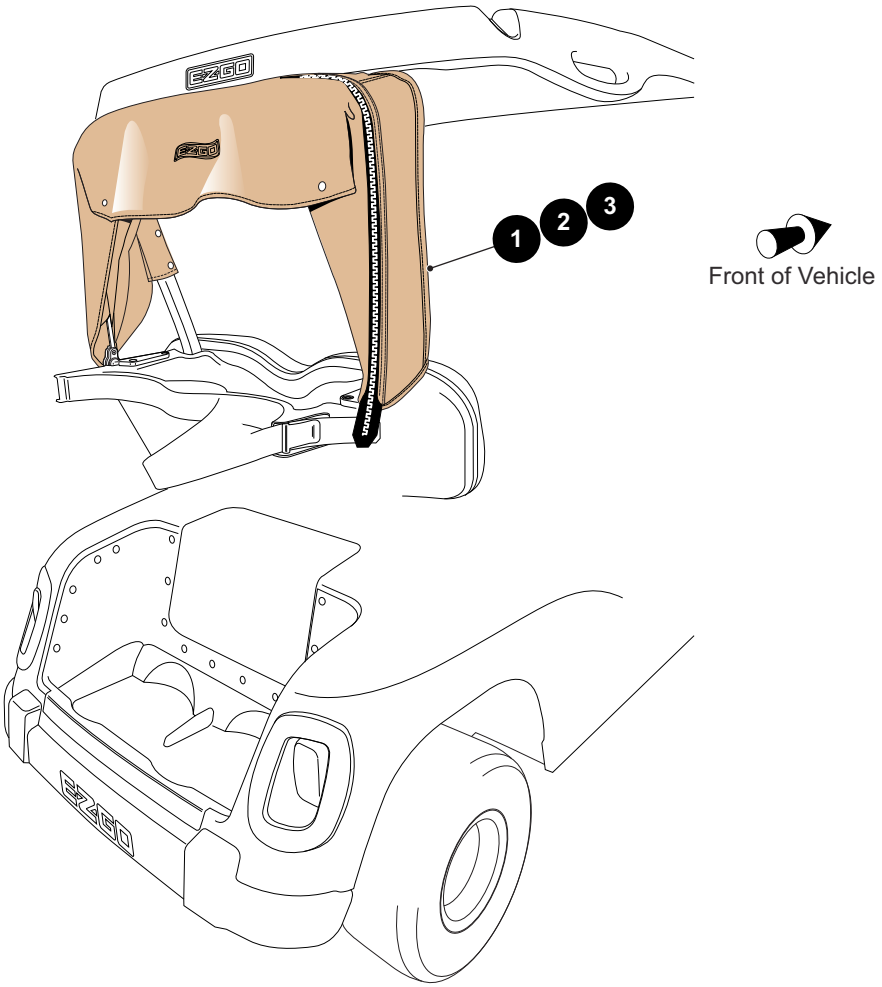

THE USE OF NON U.L. PARTS WILL VOID ANY U.L. LISTING.
When ordering parts, please specify the model and serial number of the product.
* Indicates a component that is not available as an individual part.
*** Indicates consult Customer Service Department for additional information.

ITEM	PART NO.	1 2 3 4 5 DESCRIPTION	QTY.
1	614267	Bag Cover Kit (Stone Beige)	1
2	614268	Bag Cover Kit (Oyster)	1
3	619020	Bag Cover Kit (Black)	1

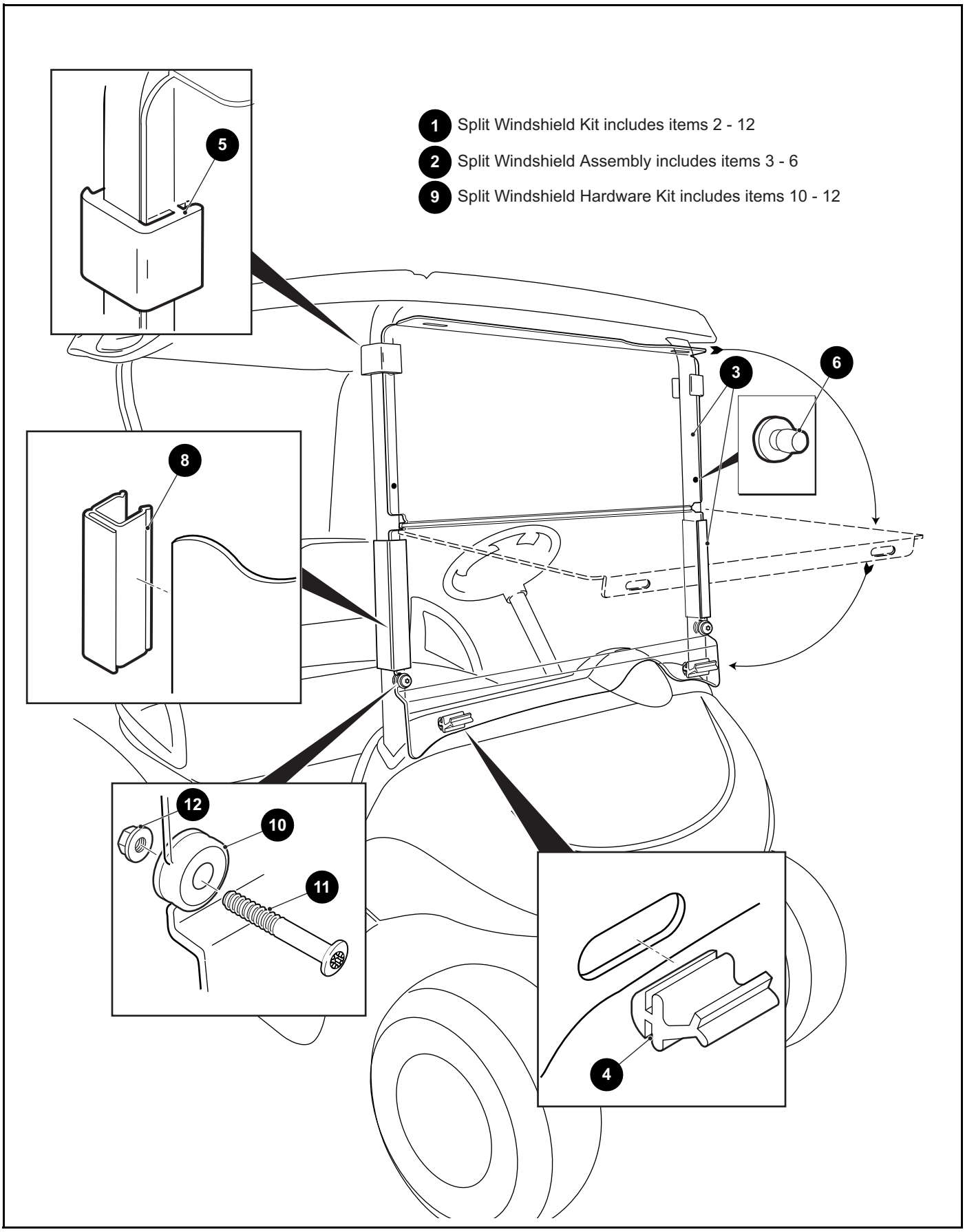
1 Split Windshield Kit includes items 2 - 12
2 Split Windshield Assembly includes items 3 - 6
9 Split Windshield Hardware Kit includes items 10 - 12
5
3
6
8
12
10
11
4

THE USE OF NON U.L. PARTS WILL VOID ANY U.L. LISTING.
When ordering parts, please specify the model and serial number of the product.
* Indicates a component that is not available as an individual part.
*** Indicates consult Customer Service Department for additional information.

ITEM	PART NO.	1 2 3 4 5 DESCRIPTION	QTY.
1	10009762	Split Windshield Kit (Includes Items 2 - 12)	1
2	606623	Split Windshield Assembly (Includes Items 3 - 6)	1
3	603738	Split Windshield	1
4	603201	Lower Windshield Latch	2
5	603198	Upper Windshield Latch	2
6	604115	Isolator	2
7			
8	10009146	Windshield Attachment Sash, 9"	2
9	668122	Split Windshield Hardware Kit (Includes Items 10 - 12)	1
10	604116	Grommet	2
11	600527	Button Head Torx Bolt, M10 - 1.5 X 60mm Lg	2
12	600525	Flanged Lock Nut, M10 - 1.5	2
13			
14	608767	Split Wind Shield Kit (Tinted) (Not Illustrated)	1
15	601379	Rear View Mirror Kit (Not Illustrated)	1

FOR SHUTTLE 2+2 ONLY

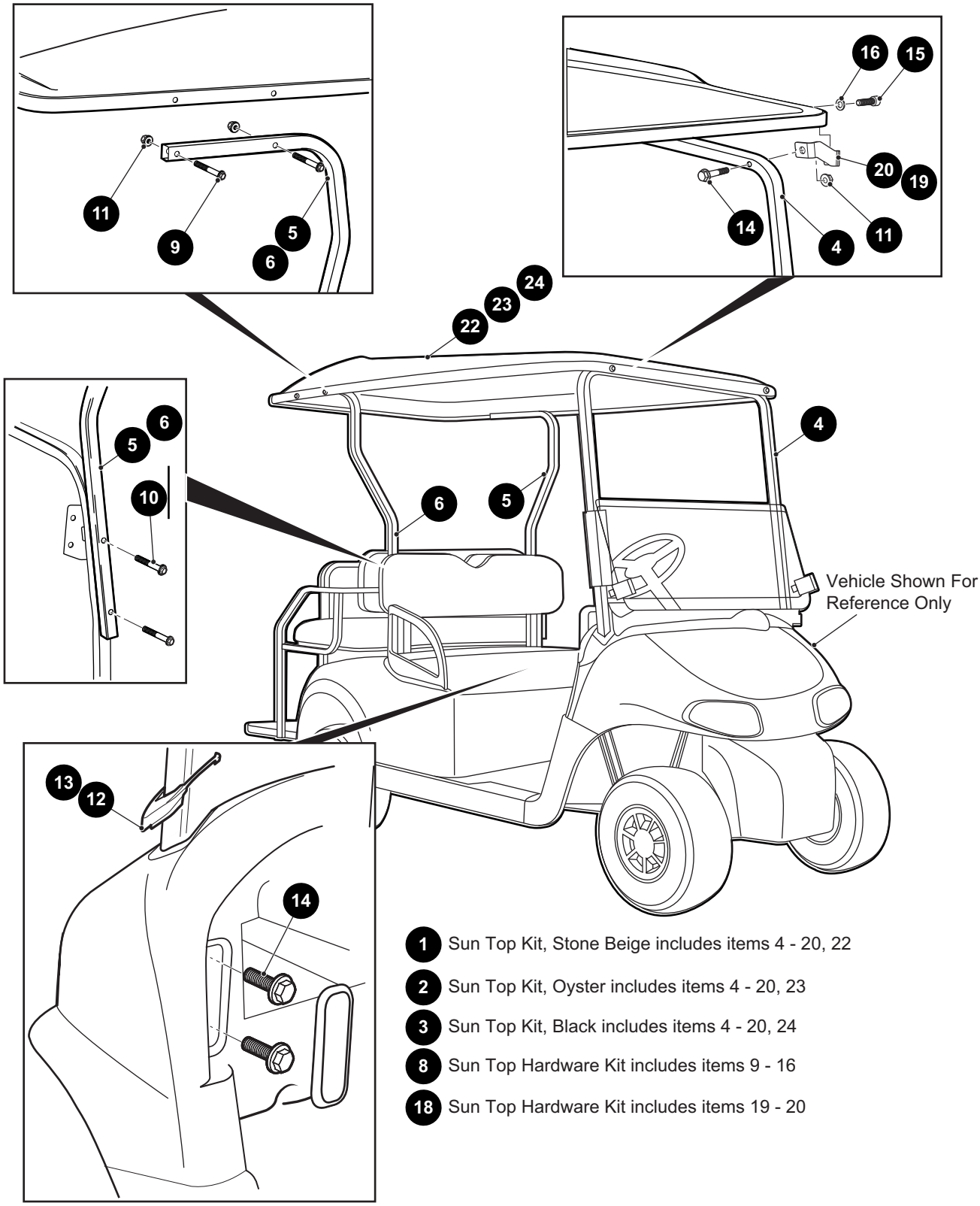

1 Sun Top Kit, Stone Beige includes items 4 - 20, 22

2 Sun Top Kit, Oyster includes items 4 - 20, 23

3 Sun Top Kit, Black includes items 4 - 20, 24

8 Sun Top Hardware Kit includes items 9 - 16

18 Sun Top Hardware Kit includes items 19 - 20

THE USE OF NON U.L. PARTS WILL VOID ANY U.L. LISTING.
When ordering parts, please specify the model and serial number of the product.
* Indicates a component that is not available as an individual part.
*** Indicates consult Customer Service Department for additional information.

ITEM	PART NO.	1 2 3 4 5 DESCRIPTION	QTY.
1	610461	Sun Top Kit, Stone Beige (Includes Items 4 - 20, 22)	1
2	610462	Sun Top Kit, Oyster (Includes Items 4 -20, 23)	1
3	10006741	Sun Top Kit, Black (Includes Items 4 -20, 24)	1
4	603203	Front Strut Tube	1
5	604423	Rear Strut (Driver Side)	1
6	604424	Rear Strut (Passenger Side)	1
7			
8	610468	Sun Top Hardware Kit (Includes Items 9 - 16)	1
9	601414	Flanged Hex Head Bolt, M10 - 1.5 x 65mm Lg	4
10	602415	Flanged Hex Head Bolt, M10 - 1.5 x 80mm Lg	4
11	600525	Flanged Lock Nut, M10 - 1.5	8
12	602770	Strut Grommet (Driver Side)	1
13	602992	Strut Grommet (Passenger Side)	1
14	603800	Flanged Hex Head Bolt, M10 - 1.5 x 50mm Lg	6
15	608653	Socket Head Bolt, M10 - 1.5 x 35mm Lg	2
16	00560G1	Flat Washer, 3/8”	2
17			
18	610472	Sun Top Hardware Kit (Includes Items 19 - 20)	1
19	610424	Bracket (Driver Side)	1
20	610425	Bracket (Passenger Side)	1
21			
22	610434	Sun Top, Stone Beige	1
23	610433	Sun Top, Oyster	1
24	606937	Sun Top, Black	1

1 Wheel and Tire Assembly (Machine Alloy) includes items 2 - 5

11 Wheel and Tire Assembly (Hole-N-One) includes items 12 - 14

16 Wheel and Tire Assembly, (Kenda) includes items 17 - 19

21 Wheel and Tire Assembly, (Paramount Radial) includes items 22 - 25

26 Wheel and Tire Assembly, (Kenda) includes items 27 - 29

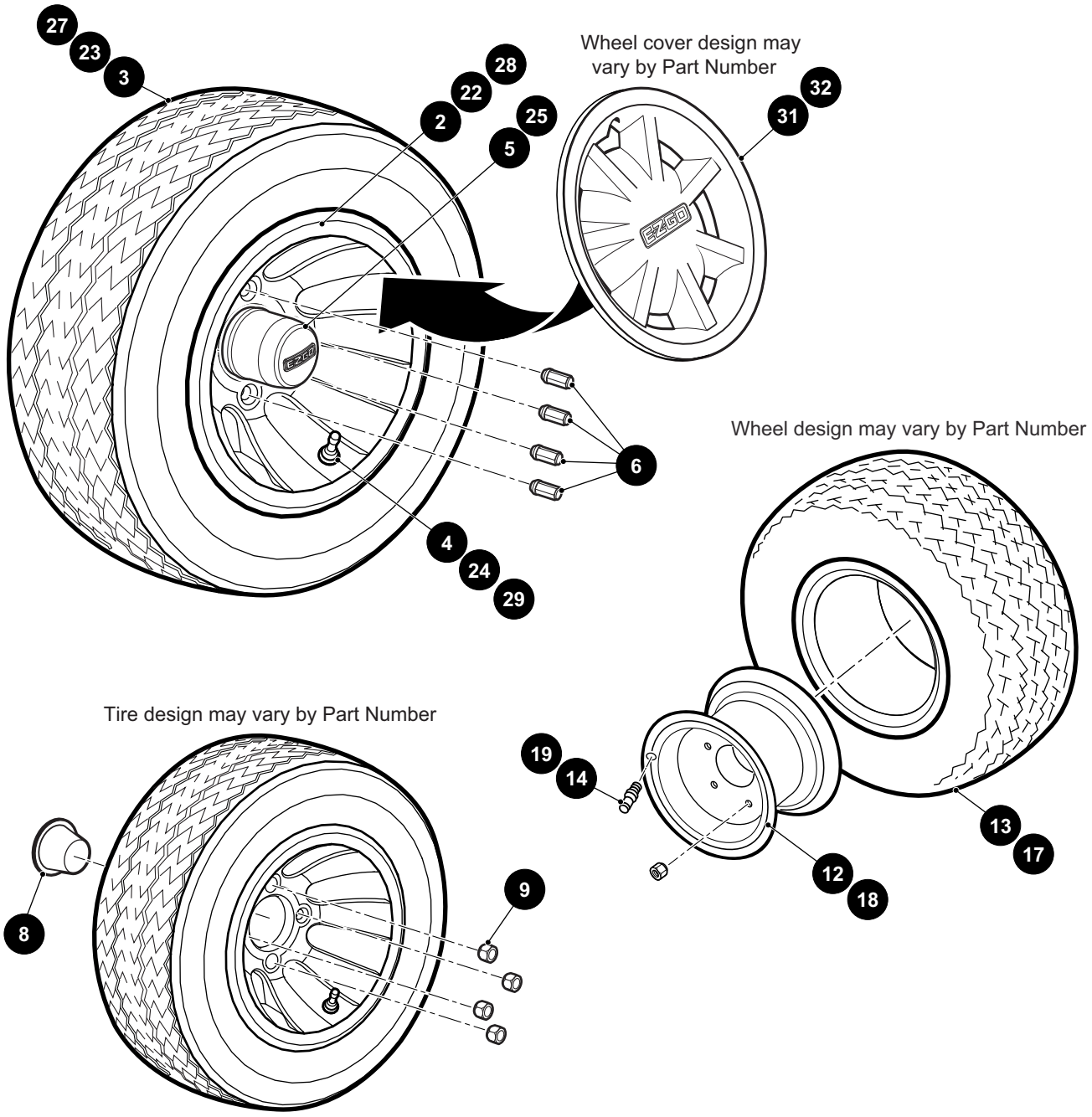

THE USE OF NON U.L. PARTS WILL VOID ANY U.L. LISTING.
When ordering parts, please specify the model and serial number of the product.
* Indicates a component that is not available as an individual part.
*** Indicates consult Customer Service Department for additional information.

ITEM	PART NO.	1 2 3 4 5 DESCRIPTION	QTY.
1	647042	Wheel and Tire Assembly (Machine Alloy) (Includes Items 2 - 5)	4
2	*	Wheel, 10"	1
3	647044	Tire (Kenda), 205/50 - 10"	1
4	604915	Valve Stem (Chrome)	1
5	652122	Wheel Cap (Chrome)	1
6	605310	Lug Nut (Chrome)	16
7			
8	74175G01	Dust Cap	2
9	14723G1	Lug Nut, 1/2" - 20	16
10			
11	612772	Wheel and Tire Assembly (Hole-N-One) (Includes Items 12 - 14)	4
12	*	Wheel, 8"	1
13	612771	Tire, 8"	1
14	11657G2	Valve Stem	1
15			
16	652255	Wheel and Tire Assembly (Kenda) (Includes Items 17 - 19)	2
17	652989	Tire, 18" x 8.5" - 8"	1
18	*	Wheel, 8" x 7"	1
19	643948	Valve Stem	1
20			
21	10013368	Wheel and Tire Assembly (Paramount Radial) (Includes Items 22 - 25)	4
22	690528	Wheel, Rouge with Mach Face, Black, 12" x 7"	1
23	699870	Tire, Paramount, 205/40 R12	1
24	604915	Valve Stem (Chrome)	1
25	685275	Wheel Cap (SS), Black	1
26	652394	Wheel and Tire Assembly (Kenda) (Includes Items 27 - 29)	2
27	614438	Tire	1
28	*	Wheel, 8" x 7"	1
29	643948	Valve Stem	1
31	665149	Wheel Cover (Metallic Gold)	1
32	665144	Wheel Cover (Metallic Silver)	1

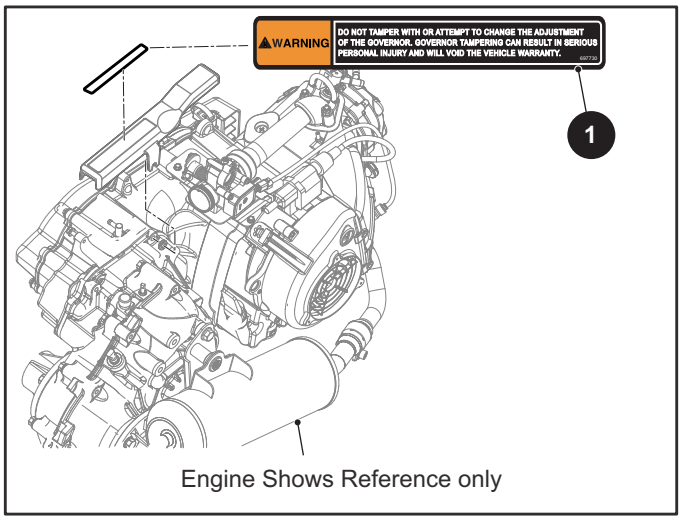
WARNING
DO NOT TAMPER WITH OR ATTEMPT TO CHANGE THE ADJUSTMENT OF THE GOVERNOR. GOVERNOR TAMPERING CAN RESULT IN SERIOUS PERSONAL INJURY AND WILL VOID THE VEHICLE WARRANTY.
1
Engine Shows Reference only

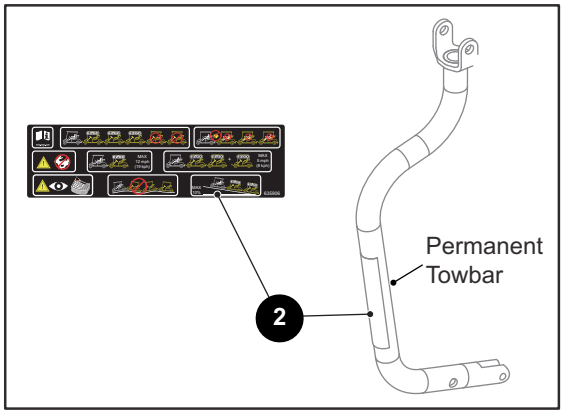
Permanent Towbar
2

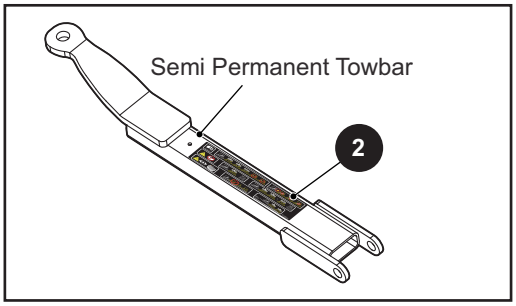
Semi Permanent Towbar
2

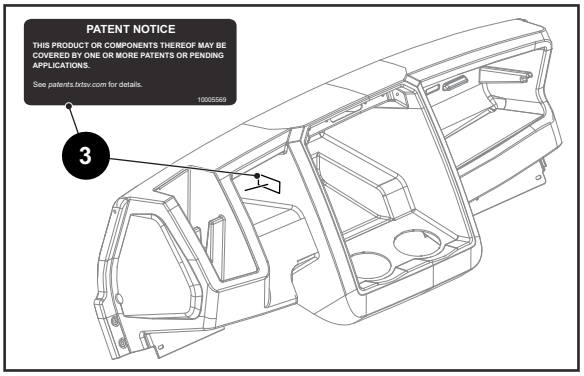
PATENT NOTICE
THIS PRODUCT OR COMPONENTS THEREOF MAY BE COVERED BY ONE OR MORE PATENTS OR PENDING APPLICATIONS.
See patents.txtsv.com for details.
10005569
3

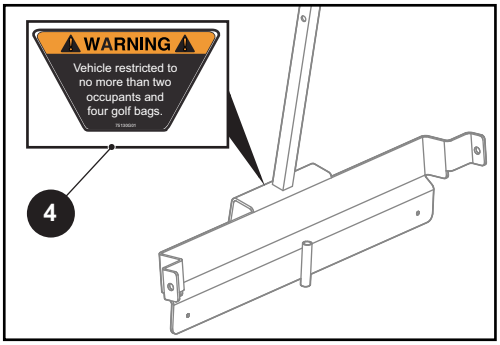
WARNING
Vehicle restricted to no more than two occupants and four golf bags.
4

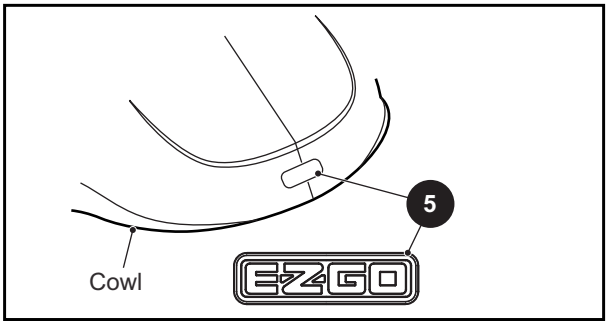
5
Cowl
EZGO

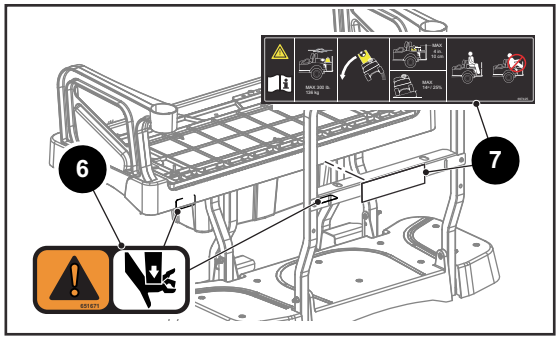
6
7

THE USE OF NON U.L. PARTS WILL VOID ANY U.L. LISTING.
When ordering parts, please specify the model and serial number of the product.
* Indicates a component that is not available as an individual part.
*** Indicates consult Customer Service Department for additional information.

ITEM	PART NO.	1 2 3 4 5 DESCRIPTION	QTY.
1	697730	Governor Warning Label	1
2	635906	Towbar Warning Label (For Fleet & Freedom)	1
3	10005569	Patent Label	1
4	75130G01	2 Person 4 Bag Warning Label (For Fleet & Freedom)	1
5	10011930	E-Z-GO Name Plate (Platinum)	1
6	651671	Pinch Warning Label (For Fleet & Shuttle 2+2)	2
7	697425	Rear Seat Label (For Fleet & Shuttle 2+2)	1

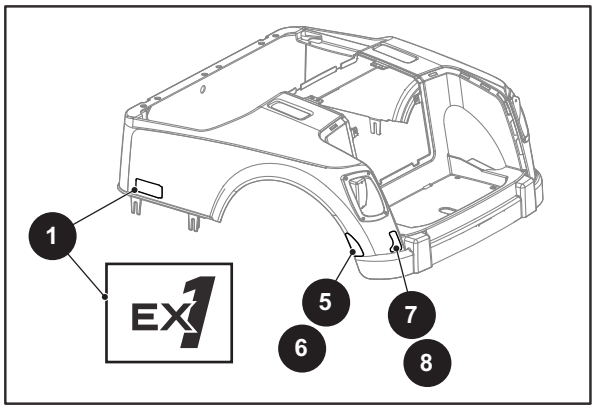
1
EX1
5
6
7
8

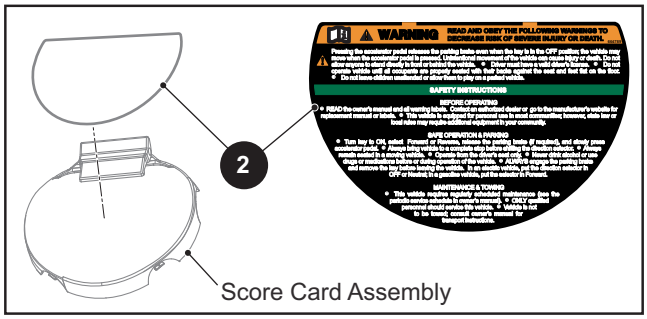
2
WARNING
READ AND OBEY THE FOLLOWING WARNINGS TO DECREASE RISK OF SEVERE INJURY OR DEATH.
SAFETY INSTRUCTIONS
BEFORE OPERATING
SAFE OPERATION & PARKING
MAINTENANCE & TOWING
Score Card Assembly

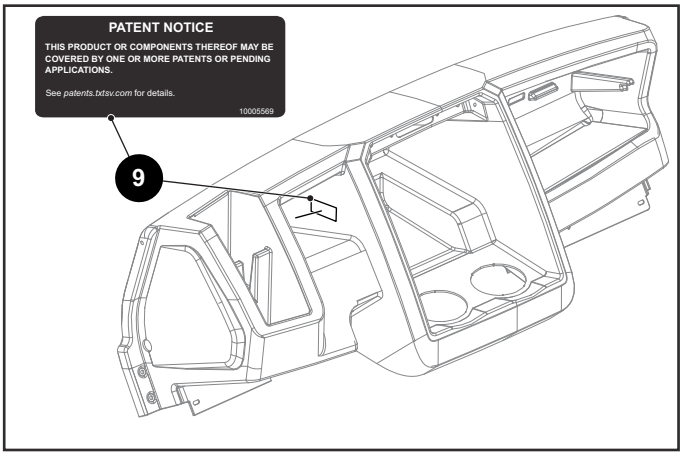
PATENT NOTICE
THIS PRODUCT OR COMPONENTS THEREOF MAY BE COVERED BY ONE OR MORE PATENTS OR PENDING APPLICATIONS.
See patents.txtsv.com for details.
10005569
9

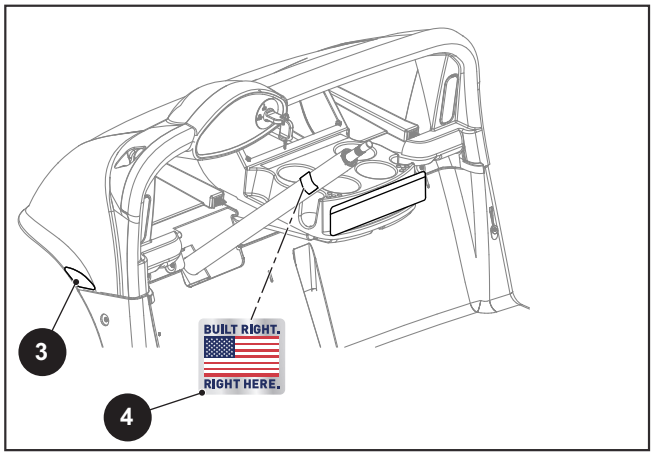
BUILT RIGHT.
RIGHT HERE.
3
4

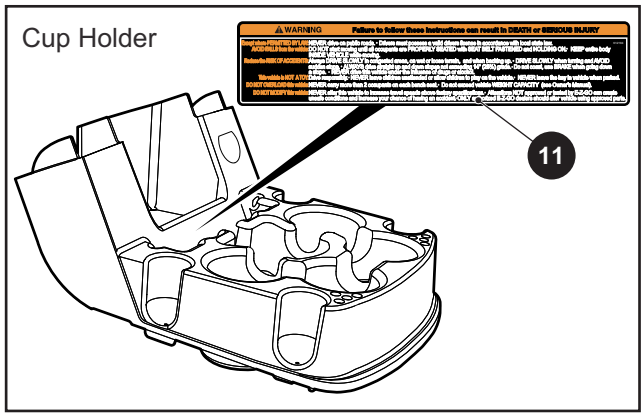
Cup Holder
WARNING
Failure to follow these instructions can result in DEATH or SERIOUS INJURY
11

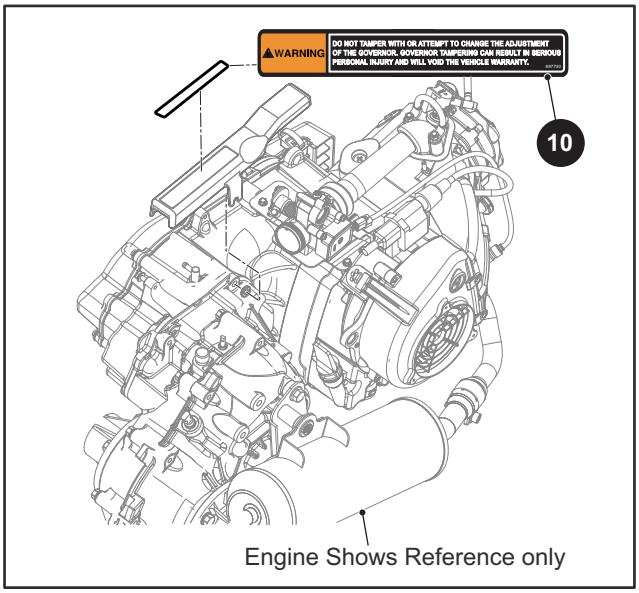
WARNING
DO NOT TAMPER WITH OR ATTEMPT TO CHANGE THE ADJUSTMENT OF THE GOVERNOR. GOVERNOR TAMPERING CAN RESULT IN SERIOUS PERSONAL INJURY AND WILL VOID THE VEHICLE WARRANTY.
10
Engine Shows Reference only

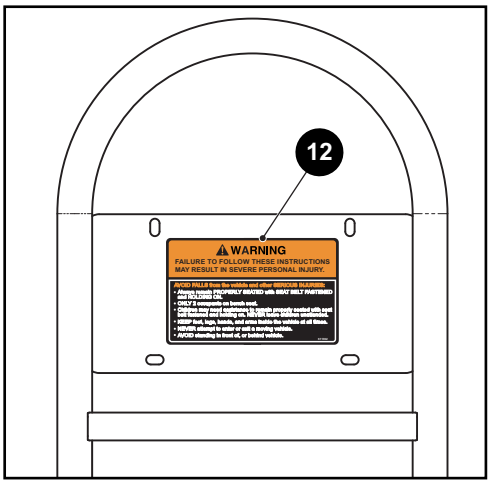
12
WARNING
FAILURE TO FOLLOW THESE INSTRUCTIONS MAY RESULT IN SEVERE PERSONAL INJURY.

THE USE OF NON U.L. PARTS WILL VOID ANY U.L. LISTING.
When ordering parts, please specify the model and serial number of the product.
* Indicates a component that is not available as an individual part.
*** Indicates consult Customer Service Department for additional information.

ITEM	PART NO.	1 2 3 4 5 DESCRIPTION	QTY.
1	10007729	EX1 Branding Decal	2
2	664789	Steering Wheel Label (For Freedom & Shuttle 2+2)	1
3	608991	Yellow Reflector (For Freedom & Shuttle 2+2)	2
4	685698	MADE IN USA Decal (For Freedom & Shuttle 2+2)	1
5	608993	Side Reflector (Red) (Driver Side) (For Freedom & Shuttle 2+2)	1
6	608996	Side Reflector (Red) (Passenger Side) (For Freedom & Shuttle 2+2)	1
7	625246	Rear Reflex Reflector (Red) (Passenger Side) (For Freedom & Shuttle 2+2)	1
8	625244	Rear Reflex Reflector (Red) (Driver Side) (For Freedom & Shuttle 2+2)	1
9	10005569	Patent Label	1
10	697730	Governor Warning Label	1
11	612194	Cup Holder Label (For Shuttle 2+2)	1
12	611362	Rear Facing Seat Label (For Shuttle 2+2)	1

FOR CE VEHICLES

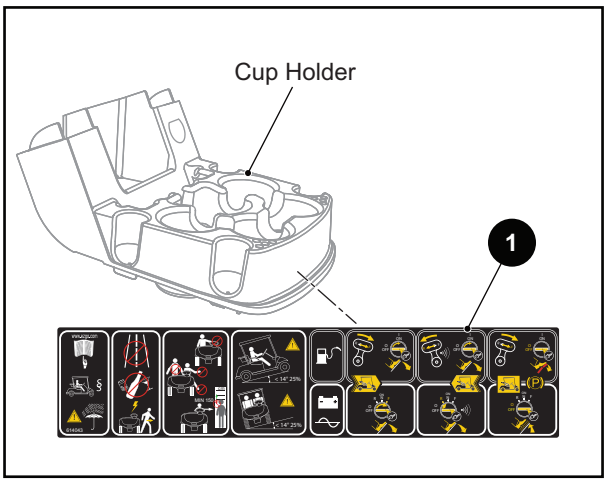

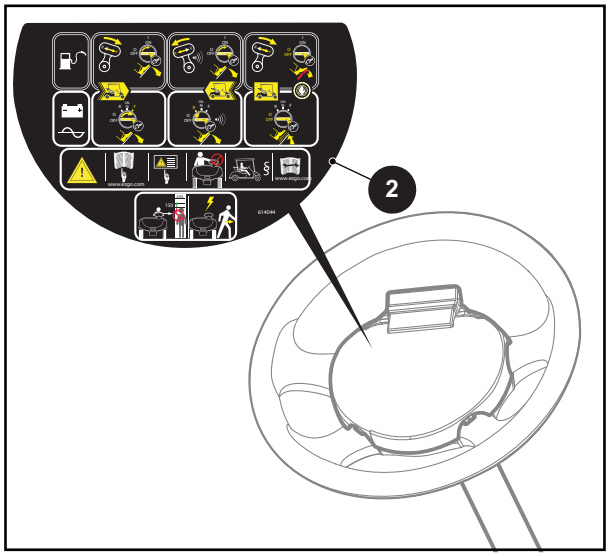

4

AUTHORIZED REPRESENTATIVE IN EC IS:

RANSOMES JACOBSEN FRANCE
3 Chemin des silos
ZI du Chapitre
31100 Toulouse

614068

CE

3

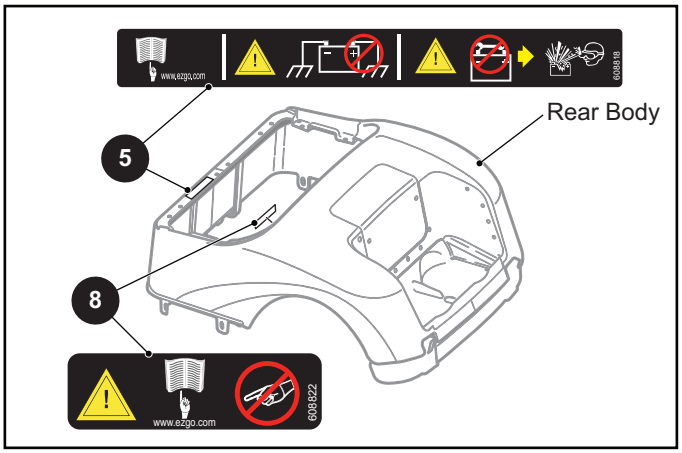

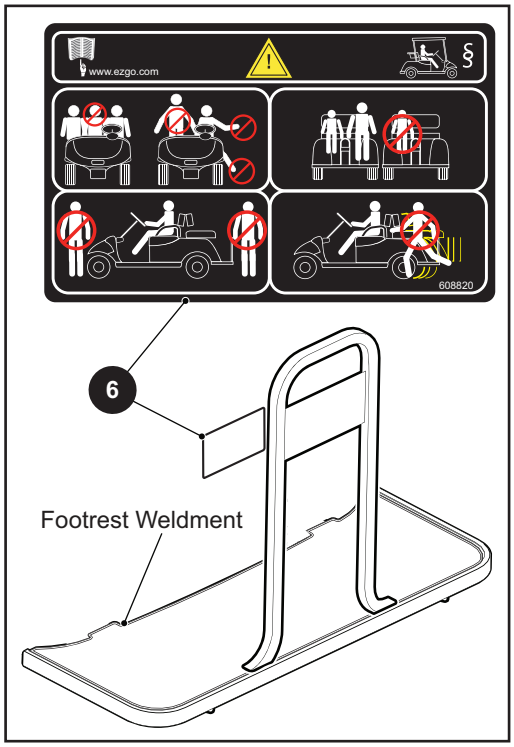

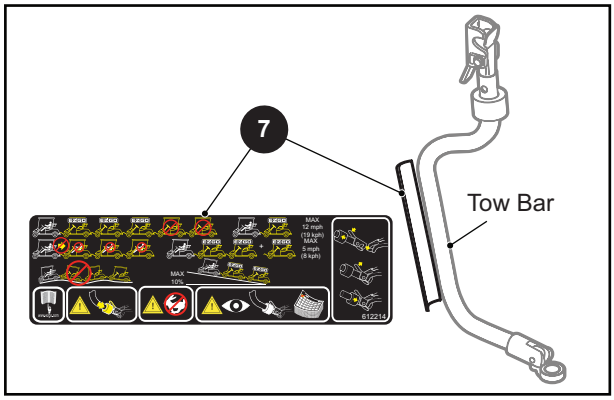

THE USE OF NON U.L. PARTS WILL VOID ANY U.L. LISTING.
When ordering parts, please specify the model and serial number of the product.
* Indicates a component that is not available as an individual part.
*** Indicates consult Customer Service Department for additional information.

ITEM	PART NO.	1 2 3 4 5 DESCRIPTION	QTY.
1	**6**14043	Instrument Panel Warning Label	1
2	614044	Steering Wheel Label	1
3	601783	CE Decal	1
4	*	Authorized Represenative Decal	1
5	608818	Negative Ground Decal, CE	1
6	608820	Shuttle 2+2 Label	1
7	612214	Towbar Decal	1
8	608822	Governor Decal	1

Notes:

TEXTRON SPECIALIZED VEHICLES, INC.
1451 Marvin Griffin Road
Augusta, Georgia 30906 - 3852
USA

CONTACT INFORMATION

North America:

Technical Assistance & Warranty:
Phone: 1-800-774-3946, FAX: 1-800-448-8124
Service Parts Phone:
1-888-GET-E-Z-GO (1-888-438-3946), FAX: 1-800-752-6175

International:

Phone: 001-706-798-4311, FAX: 001-706-771-4609

Service Manuals are available for purchase from a local Distributor, an authorized Branch, Genuine E-Z-GO Parts & Accessories Department or at www.shopezgo.com.

Copyrighted Material
This manual may not be reproduced in whole or in part without the express permission of the manufacturer.